Huber
TEL. (+39) 0322 967783
MAIL. huber@huberitalia.com

Concealed thermostatic shower mixer NUOVA EGO_NE0KT010

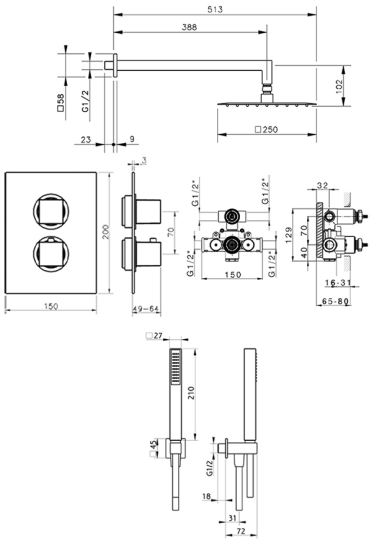

MODEL **NE0KT010**

Concealed thermostatic shower mixer,1/2" Concealed Thermostatic Mixer,2-outlet deviastop cartridge,wall mounted handshower bracket with wall elbow,400 mm shower arm,250x250 mm INOX square showerhead 2 mm thick,ABS 27x27mm one spray minimalist square handshower,1/2" wall elbow,150 cm smooth SILVERFLEX Flexible Hose

AVAILABLE FINISHINGS

21 21 Chrome

2F 2F Brushed Nickel

40 40 Matt Black

4Q 4Q Matt White

CHARACTERISTICS

Cartridge Spare Parts **24.04A.PP**

8x20 Plus P Thermostatic Valve

Installation **Concealed**

DeviaStop

The Huber Devia Stop technology allows to adjust the water flow and to direct it to the selected output point (overhead soaker, hand shower, etc).

Thermostatic

The Huber thermostatic is your personal water manager, helping you to handle, control and save water and energy.

2024-12-22

© 2021 Huber. Via Brughiere, 50. 28017 - San Maurizio (NO) - Italy
Mail: huber@hubertitalia.com, Telefono: (+39) 0322 967783, P.Iva IT02422800033.