Single lever bidet mixer NUOVA KIRUNA_K2000550

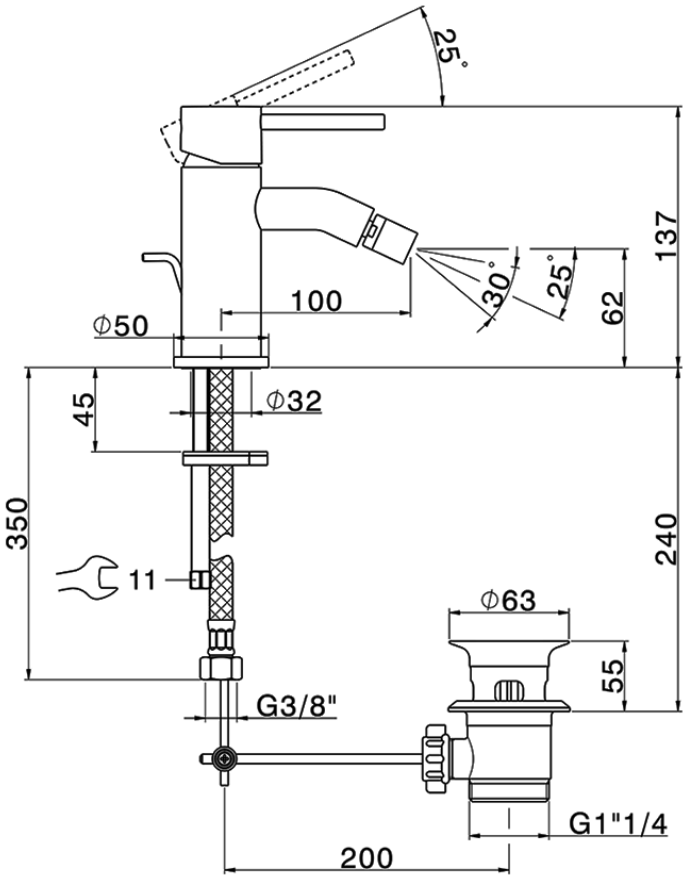

K2000550

https://en.huberitalia.com/single-lever-bidet-mixer-nuova-kiruna-k2000550

2026-05-02