# Single Lever basin/sink mixer KITCHEN_NE000534

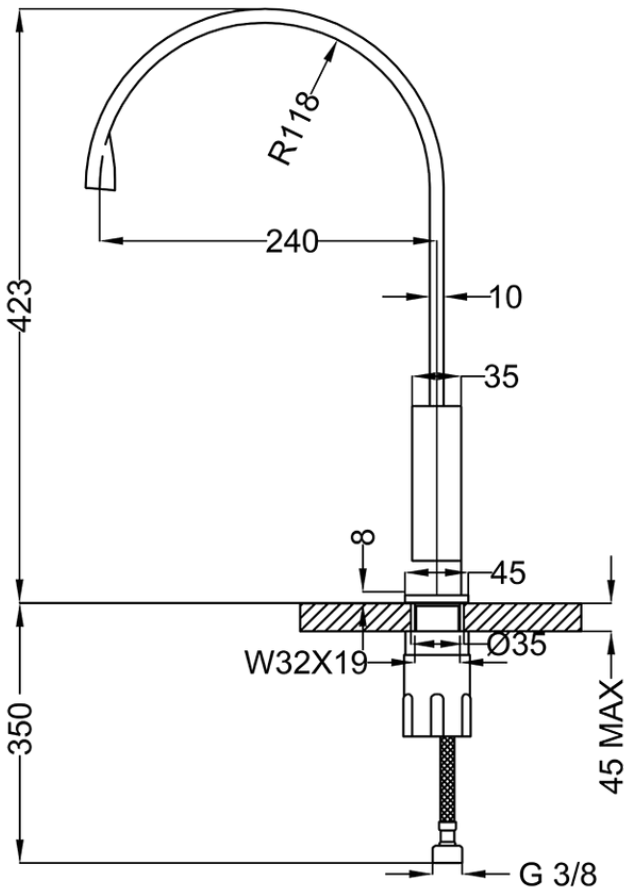


NE000534

https://en.huberitalia.com/single-lever-basin-sink-mixer-kitchen-ne000534

2026-06-25

© 2021 Huber. Via Brughiere, 50. 28017 - San Maurizio (NO) - Italy
Mail: huber@hubertitalia.com, Telefono: (+39) 0322 967783, P.Iva IT02422800033.