Single lever bidet mixer EnergySave TRATTO EVO_TV000555

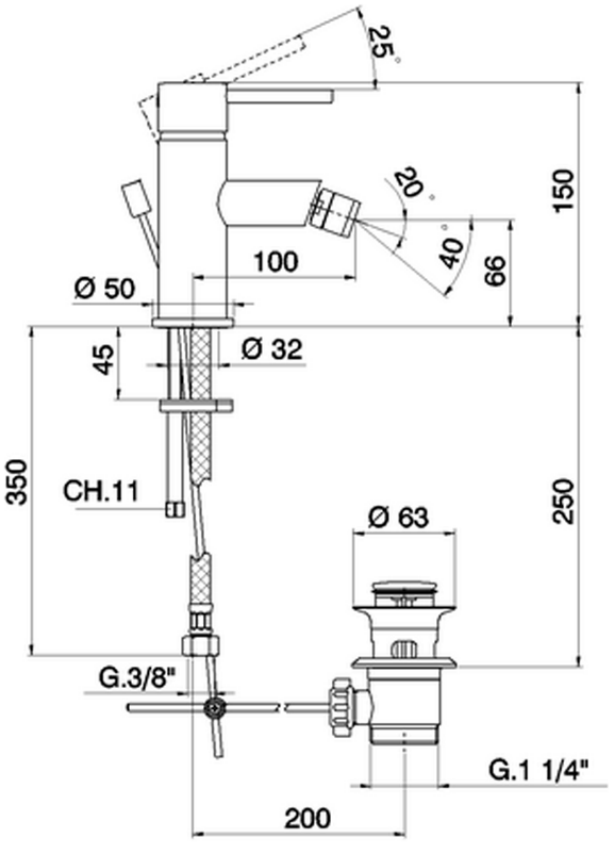

TV000555 https://en.huberitalia.com/single-lever-bidet-mixer-energysave-tratto-evo-tv000555

2026-05-02