Exposed part for single-lever bath shower mixer CHRONOS_CR014200

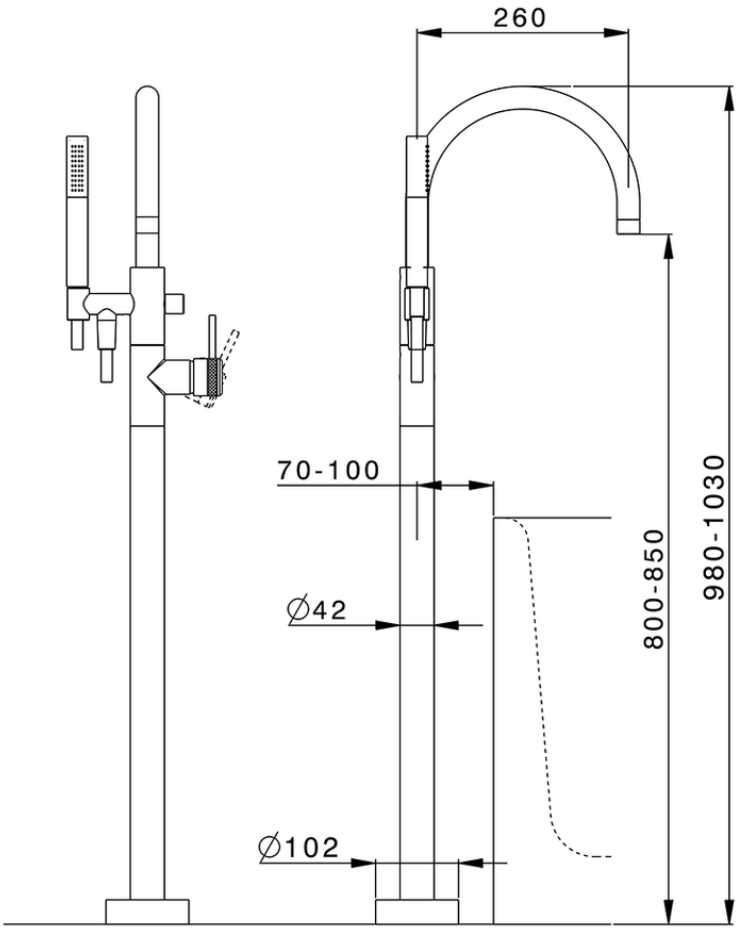

CR014200 https://en.huberitalia.com/exposed-part-for-single-lever-bath-shower-mixer-chronos-cr014200

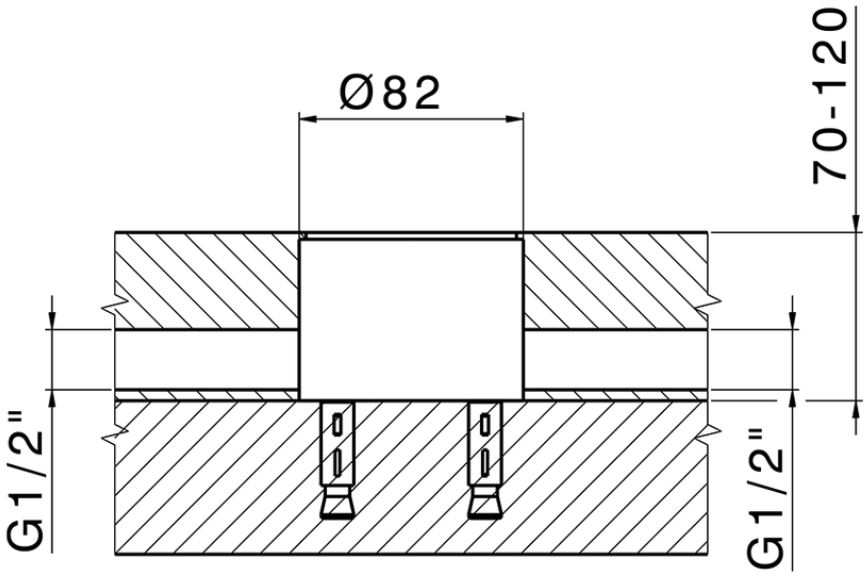

ZB004510 https://en.huberitalia.com/concealed-part-single-lever-free-standing-concealed-zb004510

2026-06-06

© 2021 Huber. Via Brughiere, 50. 28017 - San Maurizio (NO) - Italy
Mail: huber@hubertitalia.com, Telefono: (+39) 0322 967783, P.Iva IT02422800033.