Double towel holder BATHROOM ACCESSORIES_SQ090210

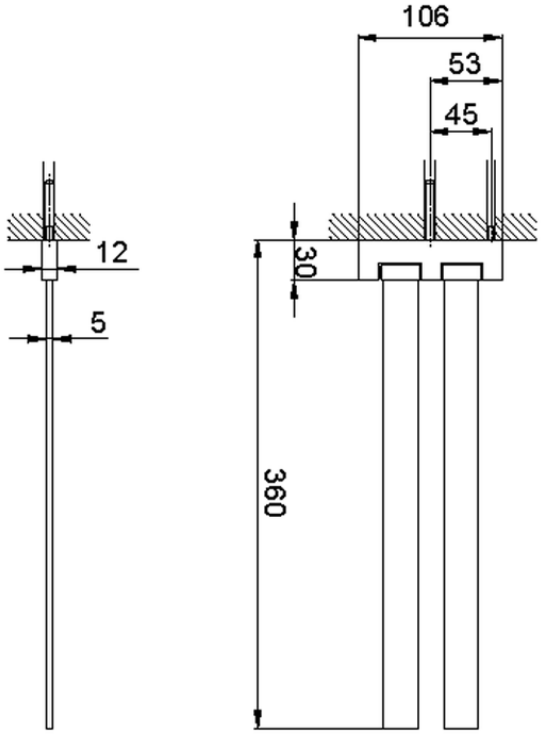

SQ090210

https://en.huberitalia.com/double-towel-holder-bathroom-accessories-sq090210

2026-01-10

© 2021 Huber. Via Brughiere, 50. 28017 - San Maurizio (NO) - Italy
Mail: huber@hubertitalia.com, Telefono: (+39) 0322 967783, P.Iva IT02422800033.