3-function Thermostatic shower set CROISETTE_592.CS21H.

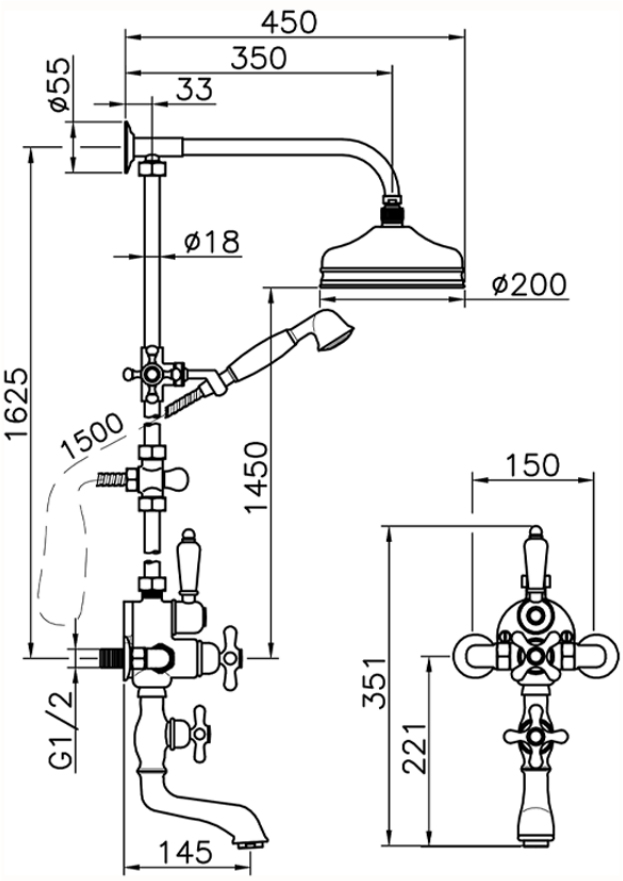

592.CS21H. https://en.huberitalia.com/3-function-thermostatic-shower-set-croisette-592-cs21h

2026-05-16

© 2021 Huber. Via Brughiere, 50. 28017 - San Maurizio (NO) - Italy
Mail: huber@hubertitalia.com, Telefono: (+39) 0322 967783, P.Iva IT02422800033.