3-function Thermostatic shower set CROISETTE_592.CS21H.

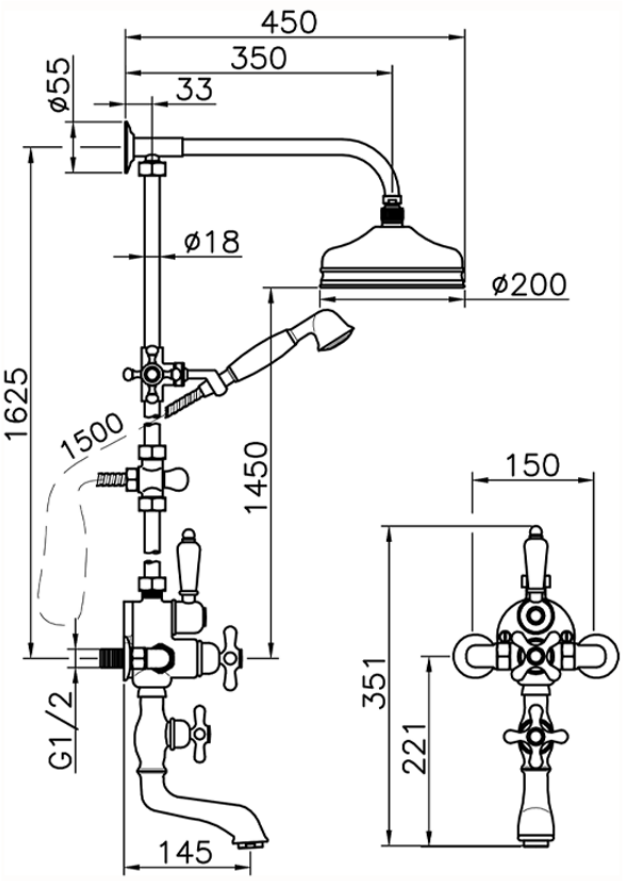

592.CS21H. https://en.huberitalia.com/3-function-thermostatic-shower-set-croisette-592-cs21h

2026-06-26