Huber
TEL. (+39) 0322 967783
MAIL. huber@huberitalia.com

3-function Thermostatic shower set CROISETTE_592.CS21H.

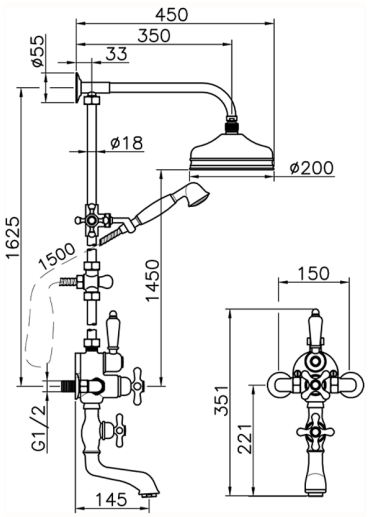

MODEL **592.CS21H.**

3-function Thermostatic shower set,2-outlet diverter,not Adjustable Shower Column,2 Stopvalves,sliding handshower bracket,classic D.53 mm Brass one spray handshower,200 mm Brass round headshower,150 cm Brass flexible hose

AVAILABLE FINISHINGS

AG AG Antique Gold

BA BA Old Bronze

CR CR Chrome

2W 2W Brushed Gold

CHARACTERISTICS

Cartridge Spare Parts **24.04A.PP**

8x20 Plus P Thermostatic Valve

Thermostatic

The Huber thermostatic is your personal water manager, helping you to handle, control and save water and energy.

© 2021 Huber. Via Brughiere, 50. 28017 - San Maurizio (NO) - Italy
Mail: huber@hubertitalia.com, Telefono: (+39) 0322 967783, P.Iva IT02422800033.

3-function Thermostatic shower set CROISETTE_592.CS21H.

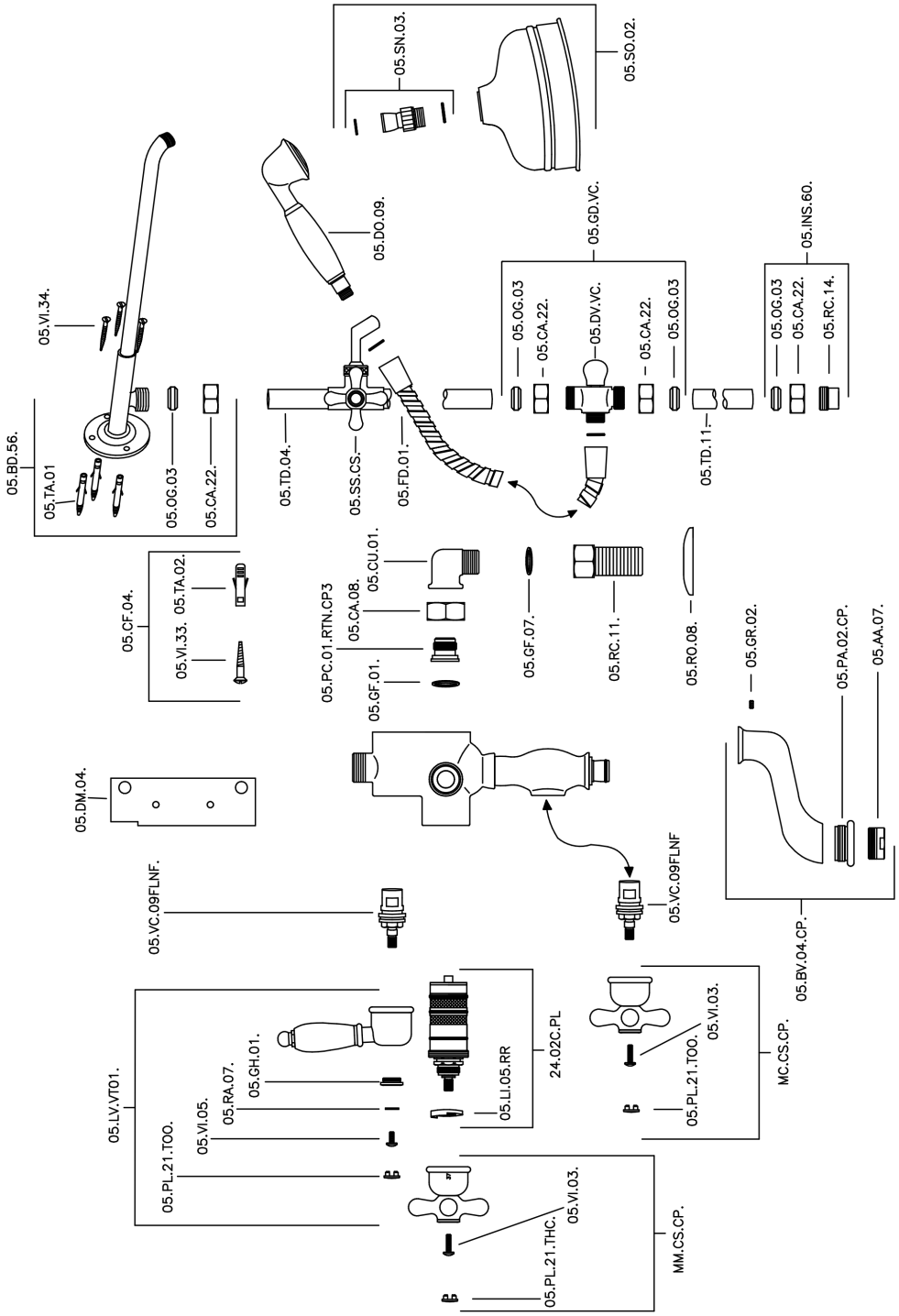

592.CS21H. https://en.huberitalia.com/3-function-thermostatic-shower-set-croisette-592-cs21h

2026-05-16