Single lever washbasin mixer EnergySave CHRONOS_CR000475

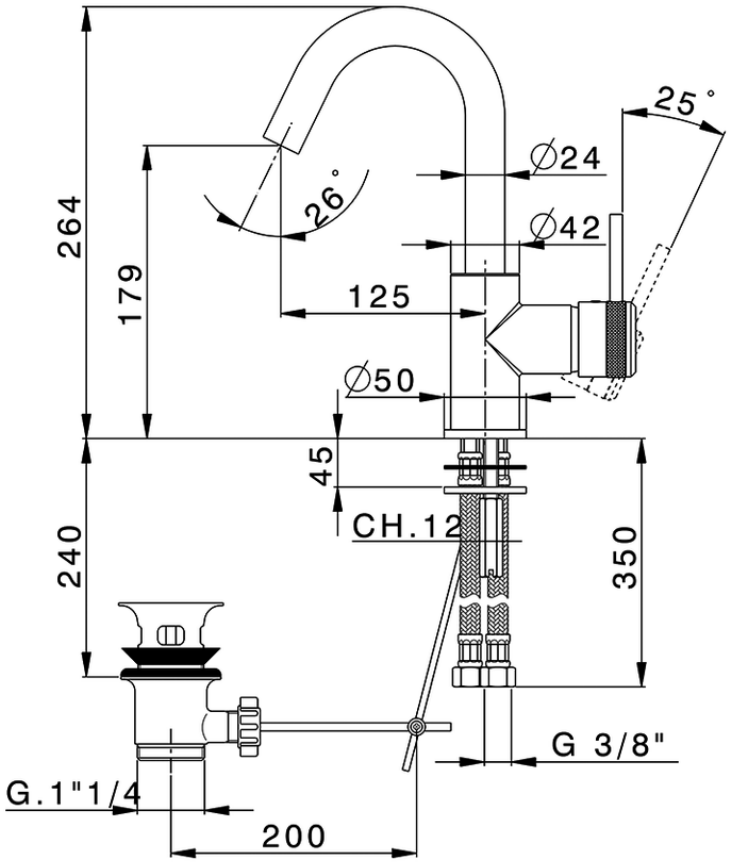

CR000475 https://en.huberitalia.com/single-lever-washbasin-mixer-energysave-chronos-cr000475

2026-06-26