Huber
TEL. (+39) 0322 967783
MAIL. huber@huberitalia.com

One Box Universal Concealed Part ONE BOX_ZB00B031

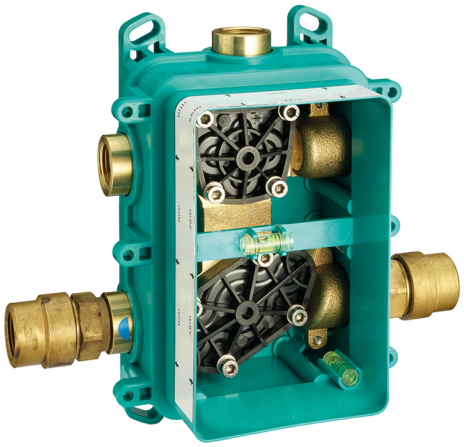

MODEL **ZB00B031**

One Box Universal Concealed Part,for 1 o 2 o 3 outlet thermostatic or single lever,without trim kit,with noise reducers,with sealing gasket

AVAILABLE FINISHINGS

04 04 Without finishing

CHARACTERISTICS

Concealed	**1**
Installation	**Concealed**

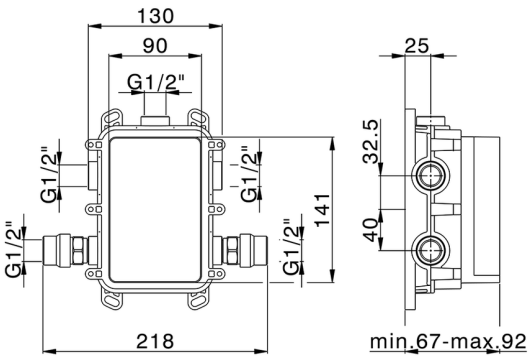

Thermostatic

The Huber thermostatic is your personal water manager, helping you to handle, control and save water and energy.

© 2021 Huber. Via Brughiere, 50. 28017 - San Maurizio (NO) - Italy
Mail: huber@hubertitalia.com, Telefono: (+39) 0322 967783, P.Iva IT02422800033.

Huber
TEL. (+39) 0322 967783
MAIL. huber@huberitalia.com

One Box Universal Concealed Part ONE BOX_ZB00B031

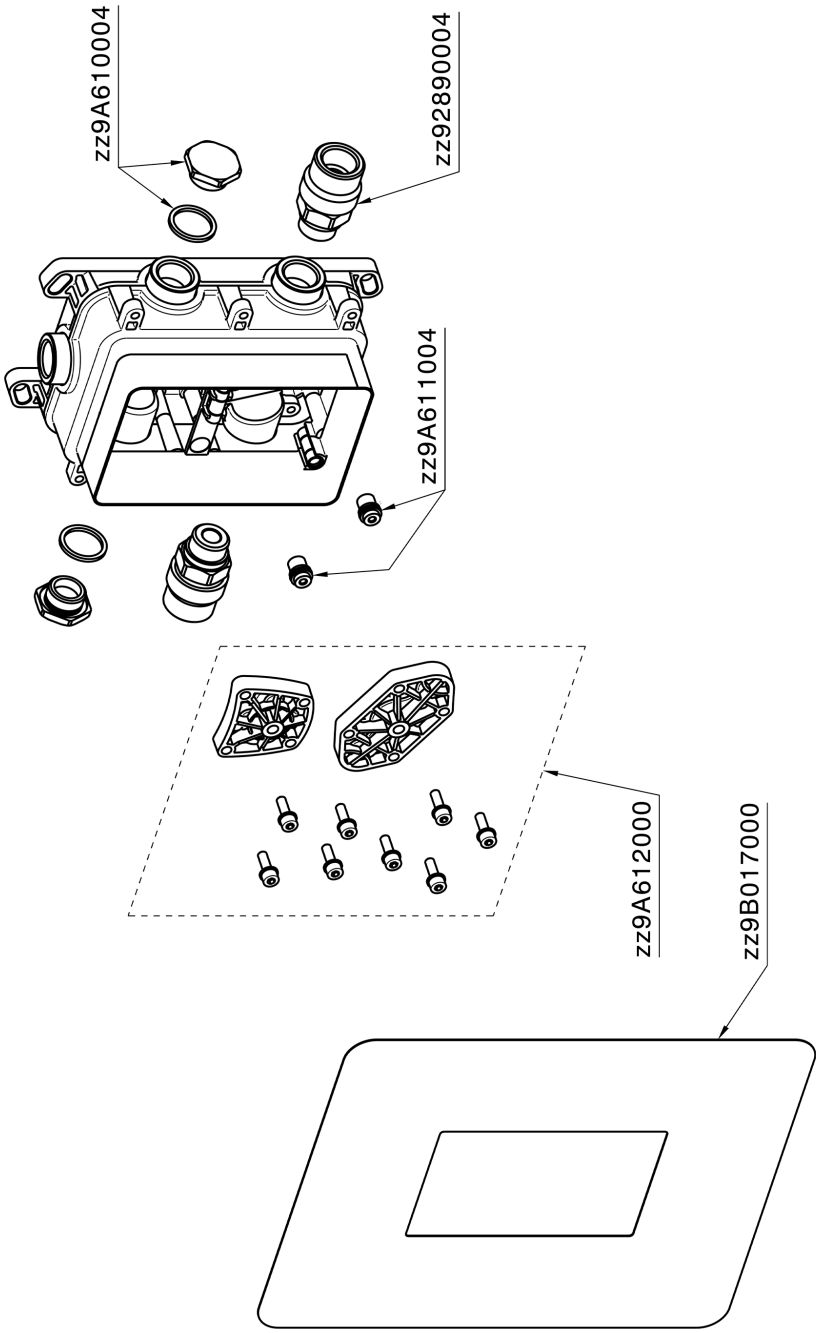

ZB00B031 https://en.huberitalia.com/one-box-universal-concealed-part-one-box-zb00b031

2026-11-23

© 2021 Huber. Via Brughiere, 50. 28017 - San Maurizio (NO) - Italy
Mail: huber@hubertitalia.com, Telefono: (+39) 0322 967783, P.Iva IT02422800033.