Huber
TEL. (+39) 0322 967783
MAIL. huber@huberitalia.com

2-function Thermostatic shower set NUOVA EGO_QTC8602H

MODEL **QTC8602H**

2-function Thermostatic shower set,2-outlet deviastop,adjustable riser column,sliding handshower holder,42x18 mm ABS Quad one spray handshower,250x250 mm INOX square showerhead 2 mm thick,150 cm smooth SILVERFLEX Flexible Hose

AVAILABLE FINISHINGS

21 21 Chrome

CHARACTERISTICS

Cartridge Spare Parts **ZZ96551000**

TMX 25 Thermostatic Valve

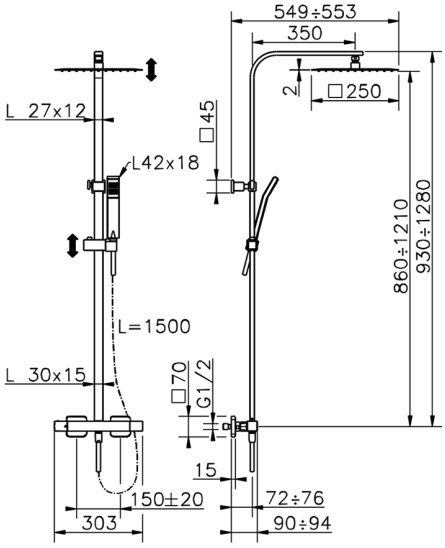

DeviaStop

The Huber Devia Stop technology allows to adjust the water flow and to direct it to the selected output point (overhead soaker, hand shower, etc).

SafeTouch

The Huber SafeTouch system maintains the mixer body cool to the touch during operation.

Thermostatic

The Huber thermostatic is your personal water manager, helping you to handle, control and save water and energy.

2024-12-22

© 2021 Huber. Via Brughiere, 50. 28017 - San Maurizio (NO) - Italy
Mail: huber@hubertitalia.com, Telefono: (+39) 0322 967783, P.Iva IT02422800033.