Huber
TEL. (+39) 0322 967783
MAIL. huber@huberitalia.com

Concealed thermostatic bath set VICTORIAN_915.VT01H.

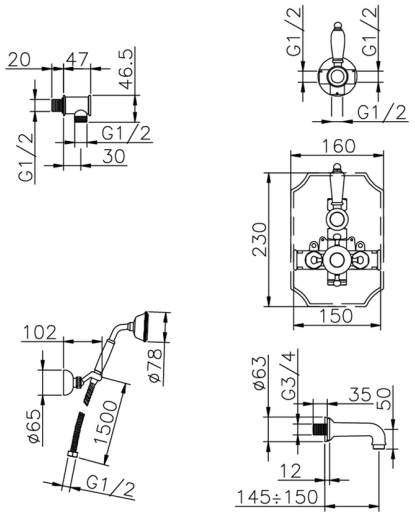

MODEL **915.VT01H.**

Concealed thermostatic bath set,1/2" Concealed Thermostatic valve,1/2" outlet stopvalve,2-outlet diverter,wall mounted adjustable handshower bracket,78 mm Brass classic one spray handshower,3/4 M 150 mm spout,1/2" wall elbow,150 cm Brass flexible hose

AVAILABLE FINISHINGS

AC AC Satin Brushed Nickel

AG AG Antique Gold

BA BA Old Bronze

CR CR Chrome

2W 2W Brushed Gold

CHARACTERISTICS

Cartridge Spare Parts **24.04A.PP**

8x20 Plus P Thermostatic Valve

Installation **Concealed**

Thermostatic

The Huber thermostatic is your personal water manager, helping you to handle, control and save water and energy.

2026-04-06

© 2021 Huber. Via Brughiere, 50. 28017 - San Maurizio (NO) - Italy
Mail: huber@hubertitalia.com, Telefono: (+39) 0322 967783, P.Iva IT02422800033.