Huber
TEL. (+39) 0322 967783
MAIL. huber@huberitalia.com

Single lever washbasin mixer NUOVA EGO_NE000514

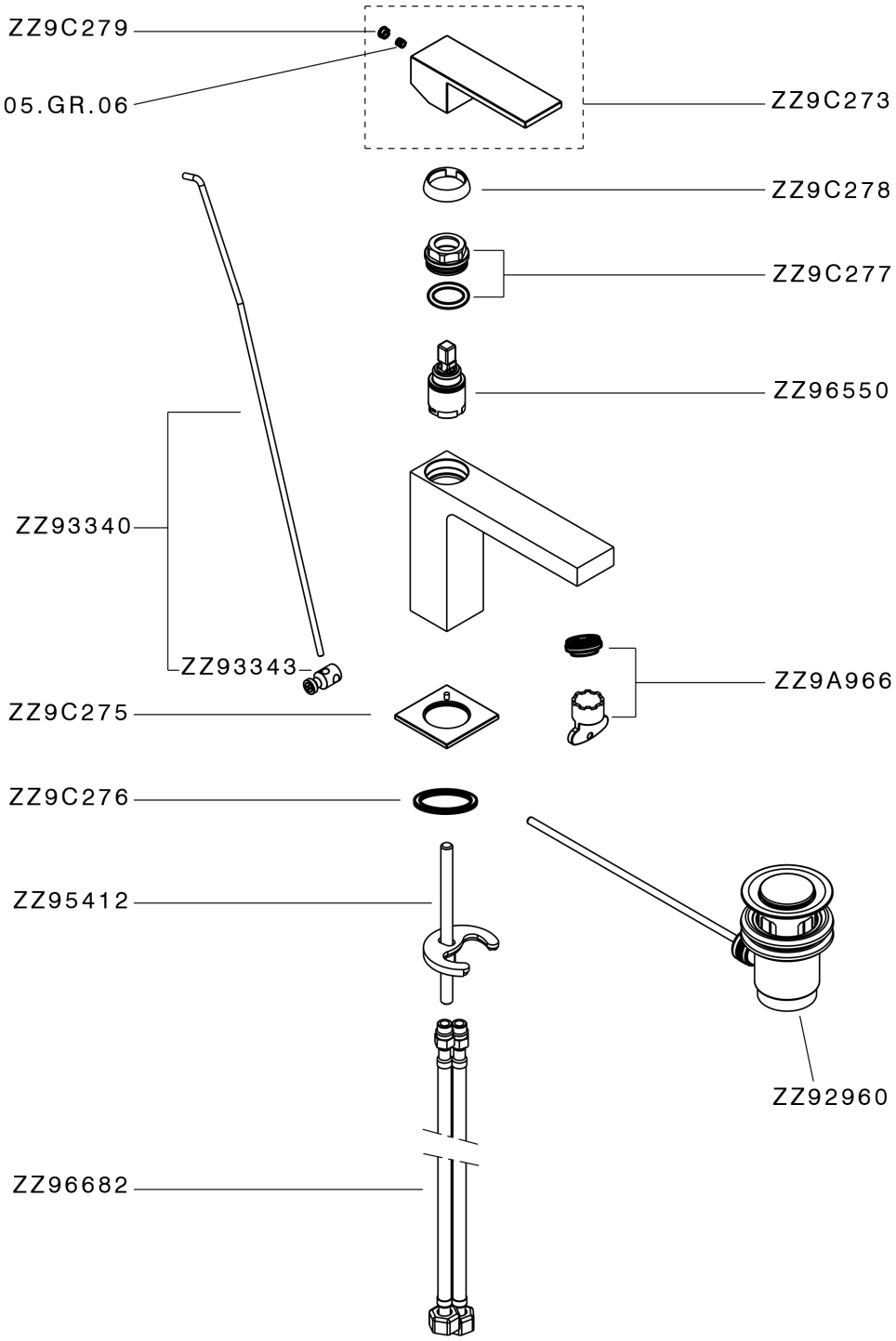

NE000514

https://en.huberitalia.com/single-lever-washbasin-mixer-nuova-ego-ne000514

2026-02-04

© 2021 Huber. Via Brughiere, 50. 28017 - San Maurizio (NO) - Italy
Mail: huber@hubertitalia.com, Telefono: (+39) 0322 967783, P.Iva IT02422800033.