3-function Bath-shower mixer column COLUMNS_AC904151

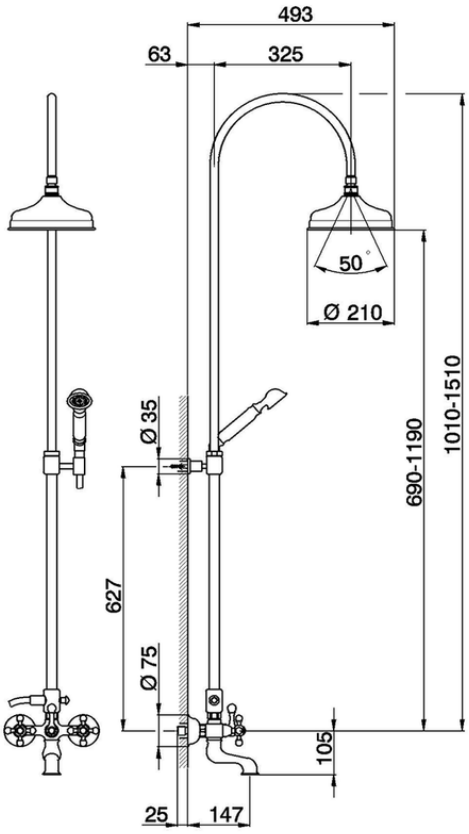

AC904151 https://en.huberitalia.com/3-function-bath-shower-mixer-column-columns-ac904151

2026-04-06

© 2021 Huber. Via Brughiere, 50. 28017 - San Maurizio (NO) - Italy
Mail: huber@hubertitalia.com, Telefono: (+39) 0322 967783, P.Iva IT02422800033.