3-functions Bath-shower mixer column CROISETTE

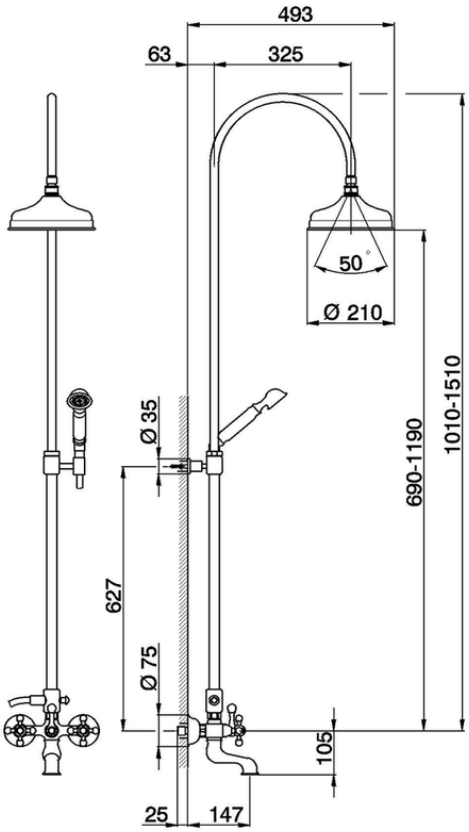

AC904151 https://en.huberitalia.com/3-functions-bath-shower-mixer-column-croisetteac904151

2024-05-04

© 2021 Huber. Via Brughiere, 50. 28017 - San Maurizio (NO) - Italy
Mail: huber@hubertitalia.com, Telefono: (+39) 0322 967783, P.Iva IT02422800033.