Huber
TEL. (+39) 0322 967783
MAIL. huber@huberitalia.com

CombiShower with Diverter COLUMNS

MODEL **SSV86030**

CombiShower with Diverter,2 outlet diverter with concealed wall elbow,adjustable riser column,sliding handshower holder,42x18 mm ABS Quad one spray handshower,250x250 mm INOX square showerhead 2 mm thick,150 cm smooth SILVERFLEX Flexible Hose

AVAILABLE FINISHINGS

21 21 Chrome

CHARACTERISTICS

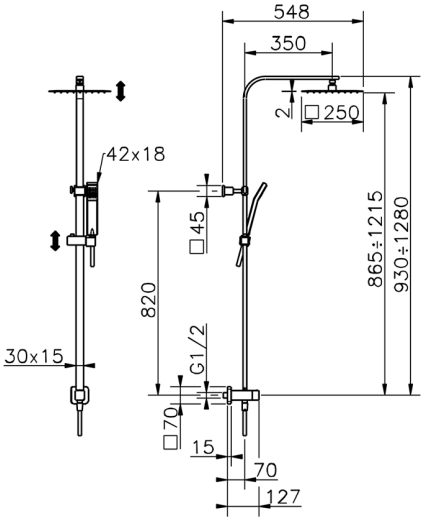

2024-05-03

© 2021 Huber. Via Brughiere, 50. 28017 - San Maurizio (NO) - Italy
Mail: huber@hubertitalia.com, Telefono: (+39) 0322 967783, P.Iva IT02422800033.