2-function Thermostatic shower set COLUMNS_390.VT01H.

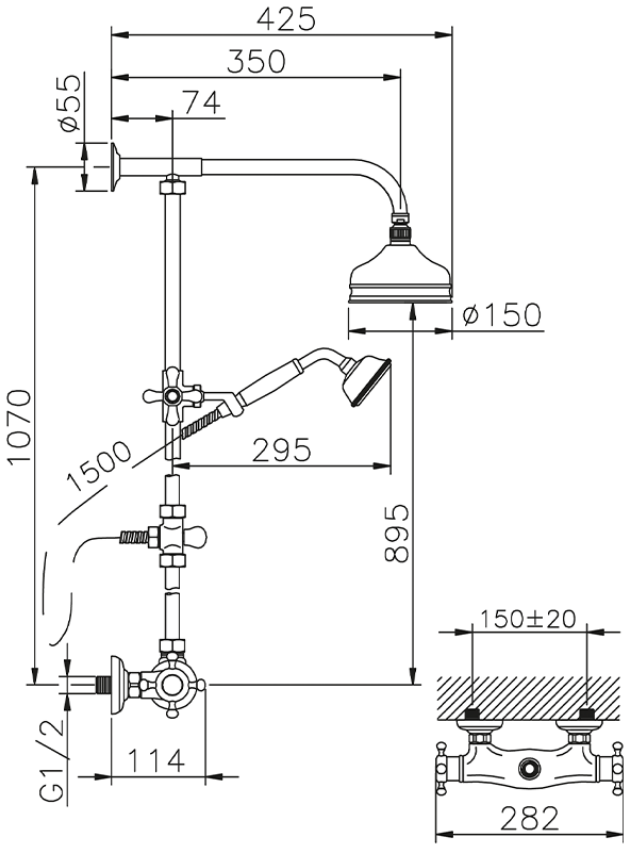

390.VT01H. https://en.huberitalia.com/2-function-thermostatic-shower-set-columns-390-vt01h

2026-06-06

© 2021 Huber. Via Brughiere, 50. 28017 - San Maurizio (NO) - Italy
Mail: huber@hubertitalia.com, Telefono: (+39) 0322 967783, P.Iva IT02422800033.