Huber
TEL. (+39) 0322 967783
MAIL. huber@huberitalia.com

# 2-function Thermostatic shower set COLUMNS_590.VN31H.

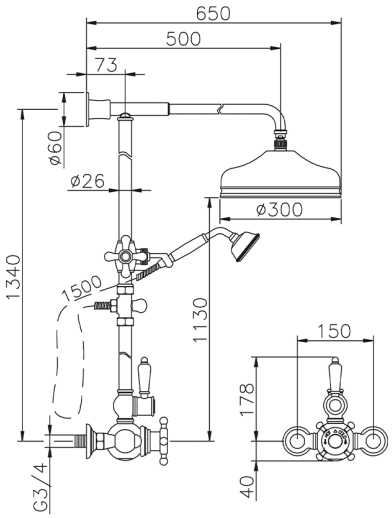


MODEL **590.VN31H.**

2-function Thermostatic shower set,2-outlet diverter,not adjustable Shower Column,sliding handshower bracket,78 mm Brass Classic one spray showerhead,300 mm Brass round headshower,150 cm Brass flexible hose

## AVAILABLE FINISHINGS

**AC** AC Satin Brushed Nickel

**AG** AG Antique Gold

**BA** BA Old Bronze

**CR** CR Chrome

**2W** 2W Brushed Gold

## CHARACTERISTICS

Cartridge Spare Parts **24.04A.PP**

**8x20 Plus P Thermostatic Valve**

### Thermostatic

The Huber thermostatic is your personal water manager, helping you to handle, control and save water and energy.

2026-04-08

© 2021 Huber. Via Brughiere, 50. 28017 - San Maurizio (NO) - Italy
Mail: huber@hubertitalia.com, Telefono: (+39) 0322 967783, P.Iva IT02422800033.