Huber
TEL. (+39) 0322 967783
MAIL. huber@huberitalia.com

2-function single lever shower set H2

MODEL **H2004033**

2-function single lever shower set,2 outlet deviastop,adjustable riser column,sliding shower bracket,ABS D.26 mm minimalistic one spray handshower,300 mm round showerhead 2 mm thick INOX,150 cm smooth SILVERFLEX Flexible Hose

AVAILABLE FINISHINGS

21 21 Chrome

CHARACTERISTICS

instructions 2	**IS.559**
Cartridge Spare Parts	**ZZ95409000**

35 mm Cartridge

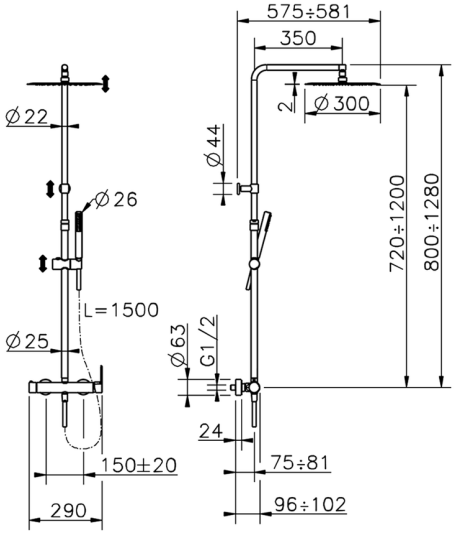

© 2021 Huber. Via Brughiere, 50. 28017 - San Maurizio (NO) - Italy
Mail: huber@hubertitalia.com, Telefono: (+39) 0322 967783, P.Iva IT02422800033.

2-function single lever shower set H2

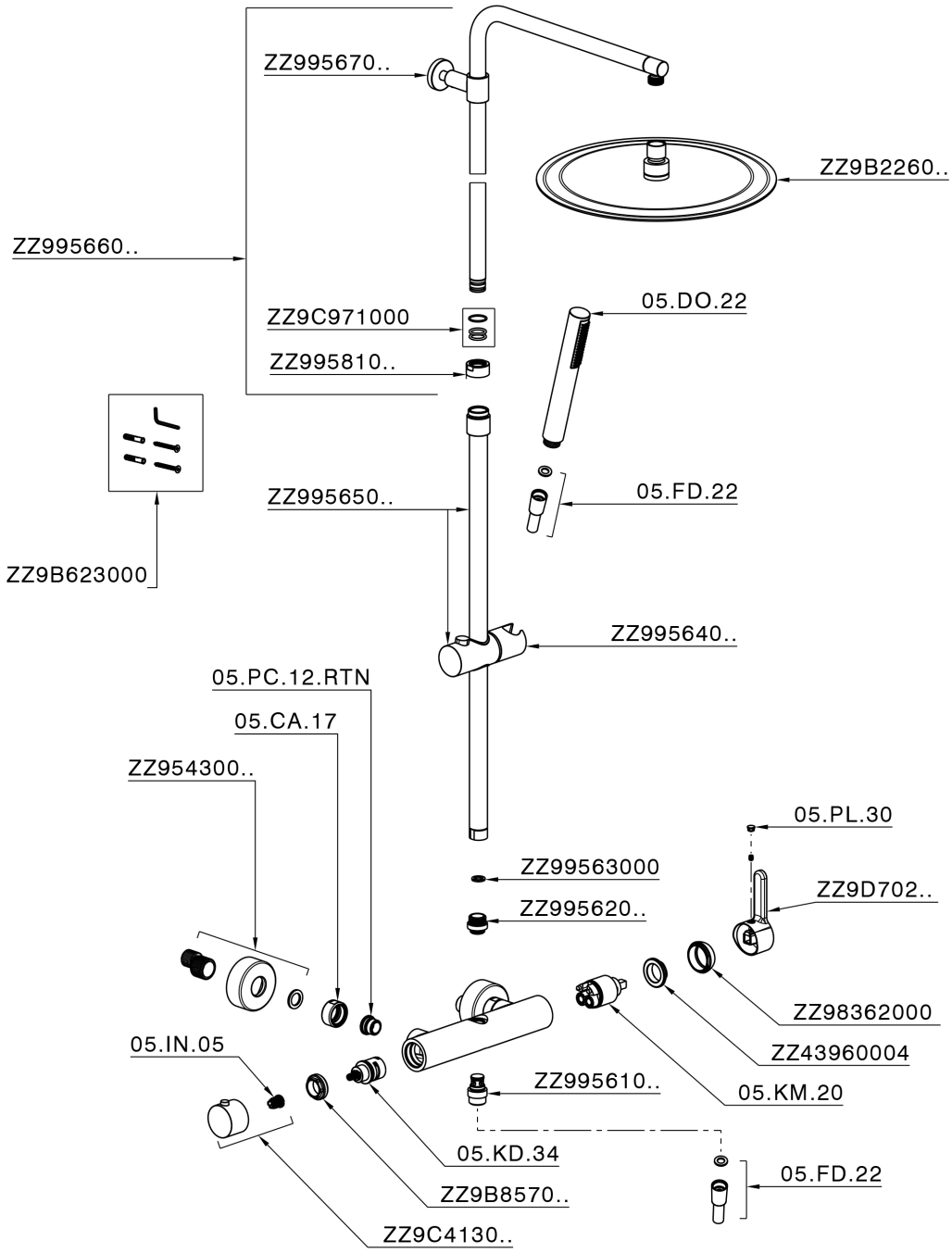

H2004033

https://en.huberitalia.com/2-function-single-lever-shower-set-h2h2004033

2024-04-30

© 2021 Huber. Via Brughiere, 50. 28017 - San Maurizio (NO) - Italy
Mail: huber@hubertitalia.com, Telefono: (+39) 0322 967783, P.Iva IT02422800033.