Huber
TEL. (+39) 0322 967783
MAIL. huber@huberitalia.com

Single lever bidet mixer CROISETTE_CM000550

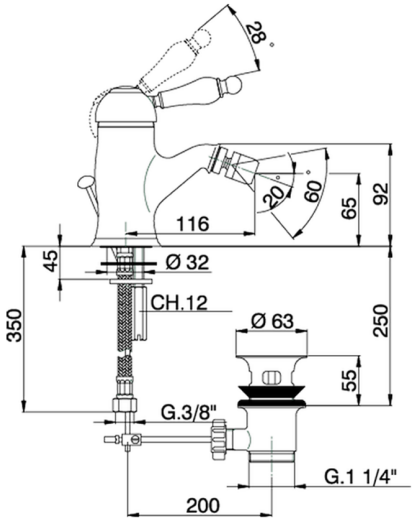

MODEL **CM000550**

Single lever bidet mixer,with automatic 1"1/4 automatic pop-up waste,G.3/8" stainless steel flexible hoses

AVAILABLE FINISHINGS

21 21 Chrome

27 27 Old Bronze

2G 2G Antique Gold

2W 2W Brushed Gold

CHARACTERISTICS

Cartridge Spare Parts **ZZ92909000**

43 mm Cartridge

© 2021 Huber. Via Brughiere, 50. 28017 - San Maurizio (NO) - Italy
Mail: huber@hubertitalia.com, Telefono: (+39) 0322 967783, P.Iva IT02422800033.

Single lever bidet mixer CROISETTE_CM000550

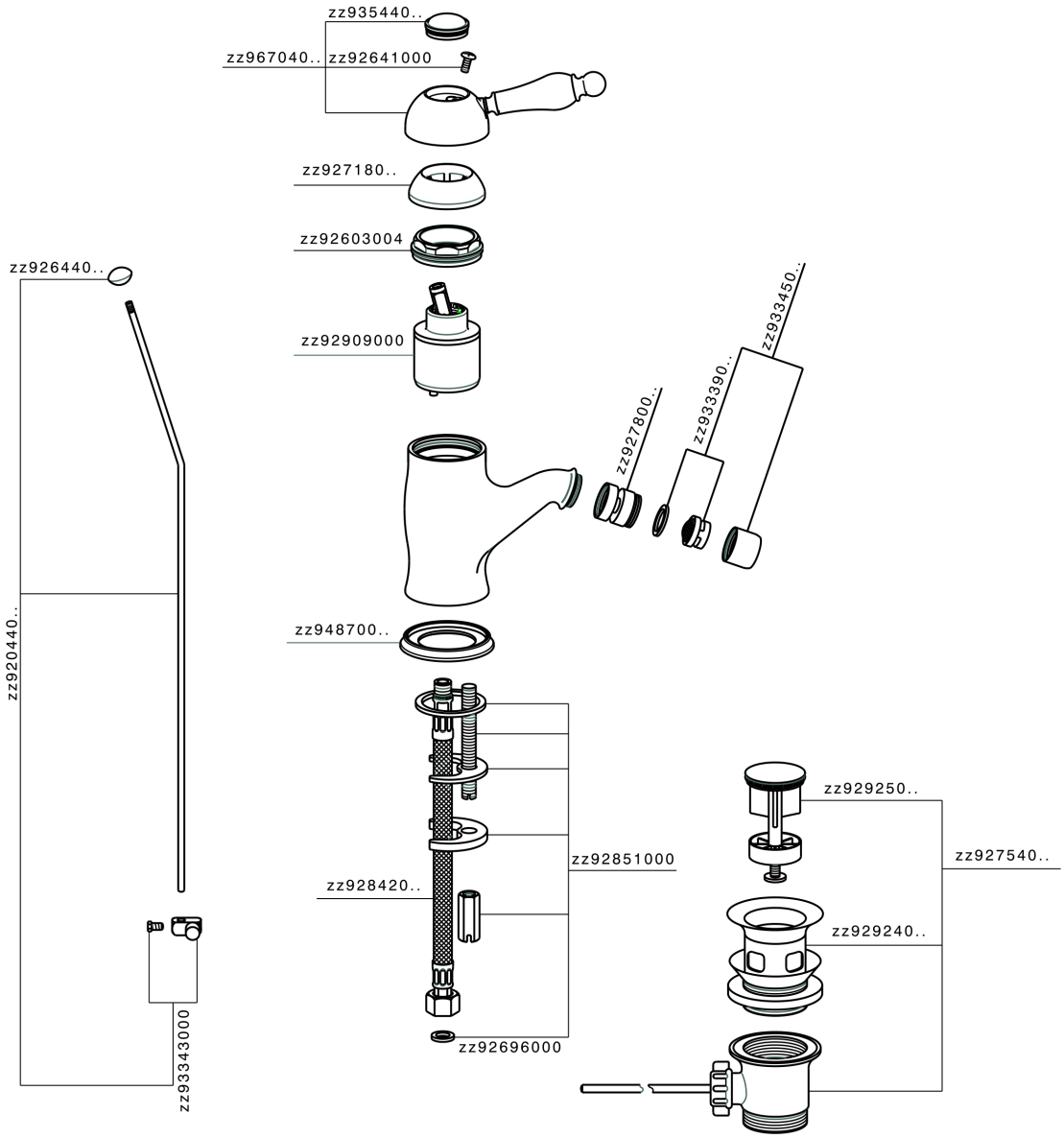

CM000550

https://en.huberitalia.com/single-lever-bidet-mixer-croisette-cm000550

2026-01-13

© 2021 Huber. Via Brughiere, 50. 28017 - San Maurizio (NO) - Italy
Mail: huber@hubertitalia.com, Telefono: (+39) 0322 967783, P.Iva IT02422800033.