Concealed 4-hole bath/shower valve SUITE_SU000210

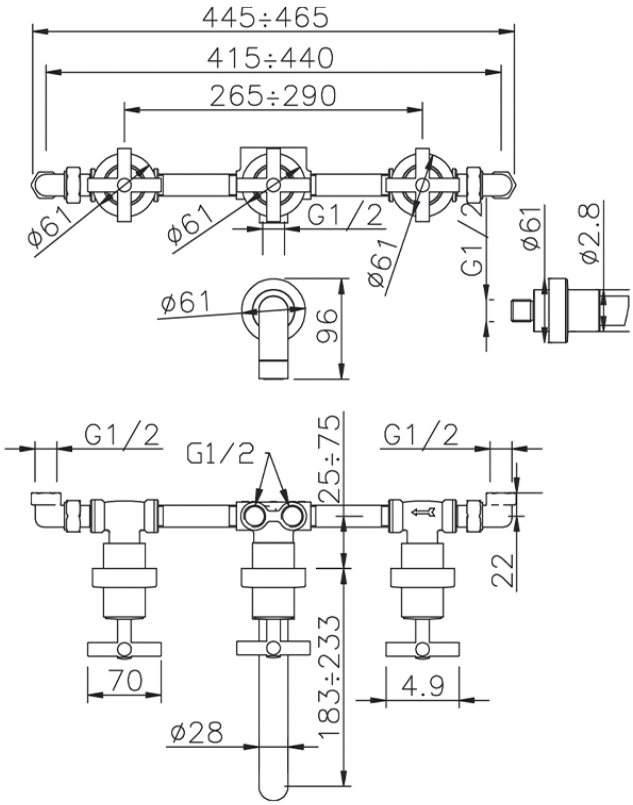

SU000210

https://en.huberitalia.com/concealed-4-hole-bath-shower-valve-suite-su000210

2026-06-26

© 2021 Huber. Via Brughiere, 50. 28017 - San Maurizio (NO) - Italy
Mail: huber@hubertitalia.com, Telefono: (+39) 0322 967783, P.Iva IT02422800033.