Single lever bidet mixer EnergySave H3_AH002555

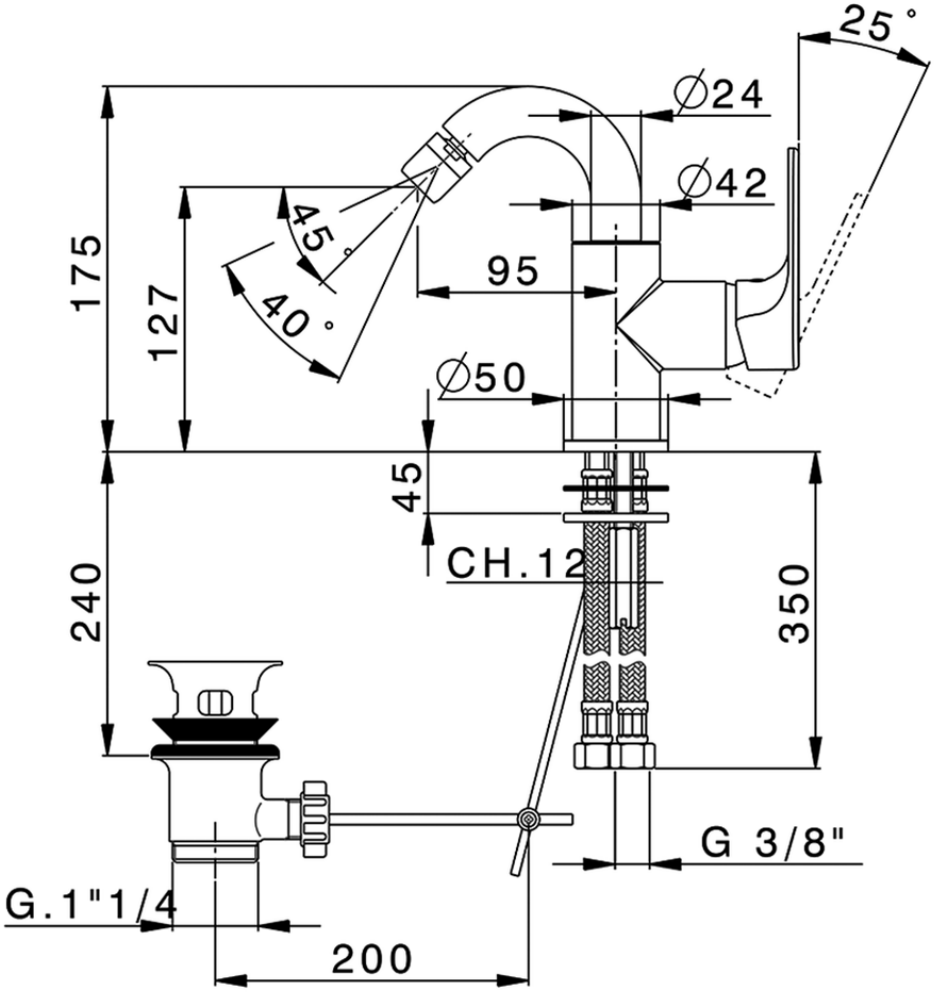

AH002555

https://en.huberitalia.com/single-lever-bidet-mixer-energysave-h3-ah002555

2026-06-26

© 2021 Huber. Via Brughiere, 50. 28017 - San Maurizio (NO) - Italy
Mail: huber@hubertitalia.com, Telefono: (+39) 0322 967783, P.Iva IT02422800033.