Suite showerset SHOWER_62.13H.

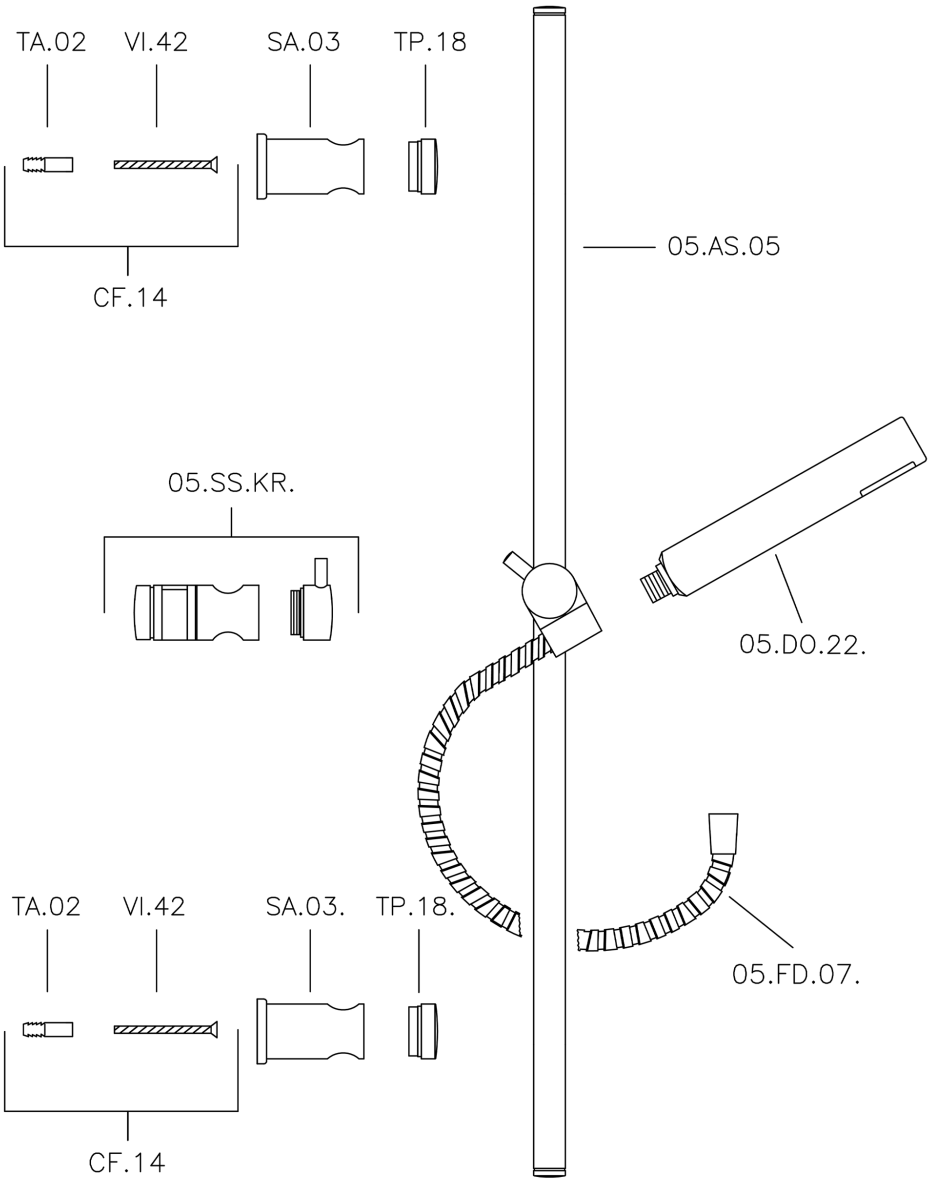

62.13H.

https://en.huberitalia.com/suite-showerset-shower-62-13h

2026-10-28