Huber
TEL. (+39) 0322 967783
MAIL. huber@huberitalia.com

Suite showerset SHOWER_62.13H.

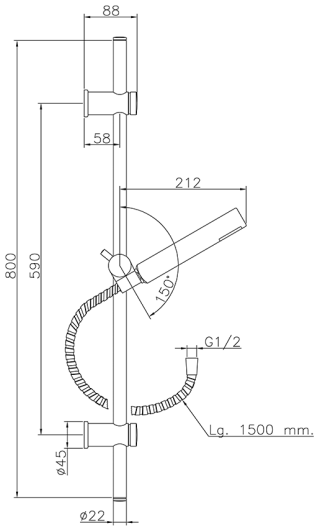

MODEL **62.13H.**

Showerset,59 cm Sliding rail bar with sliding bracket,ABS 26 mm minimalistic one spray handshower,150 cm Brass flexible hose

AVAILABLE FINISHINGS

CR CR Chrome

2W 2W Brushed Gold

NB NB Brushed Nickel

NO NO Matt Black

CHARACTERISTICS

© 2021 Huber. Via Brughiere, 50. 28017 - San Maurizio (NO) - Italy
Mail: huber@hubertitalia.com, Telefono: (+39) 0322 967783, P.Iva IT02422800033.

Suite showerset SHOWER_62.13H.

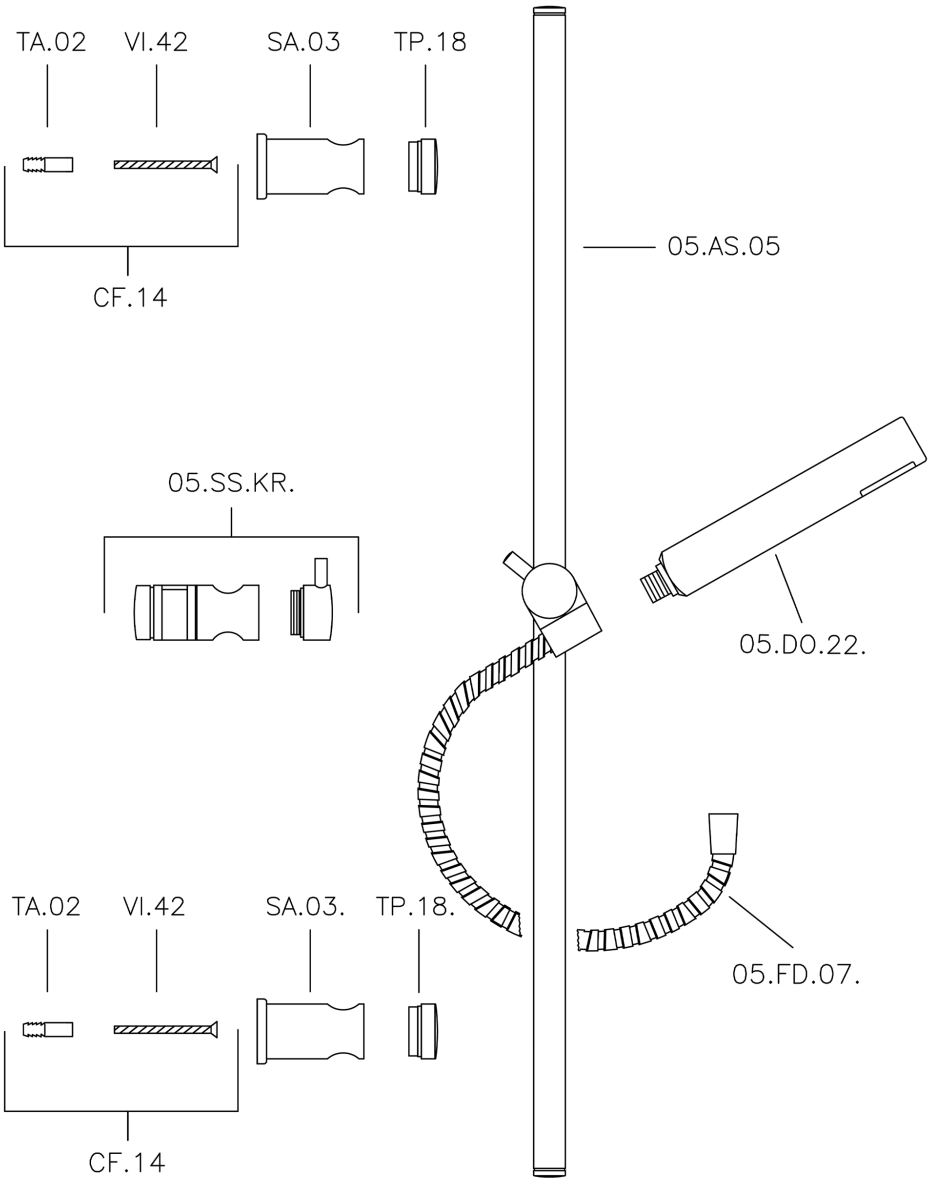

62.13H.

https://en.huberitalia.com/suite-showerset-shower-62-13h

2026-02-03