Single lever shower mixer, with shower set DADO_DD000450

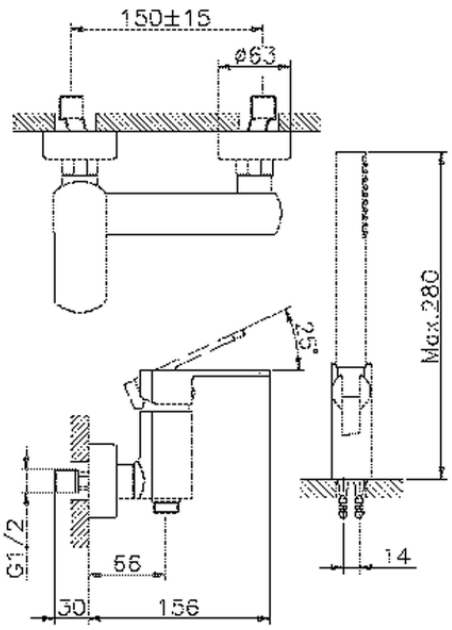

DD000450 https://en.huberitalia.com/single-lever-shower-mixer-with-shower-set-dado-dd000450

2026-06-13

© 2021 Huber. Via Brughiere, 50. 28017 - San Maurizio (NO) - Italy
Mail: huber@hubertitalia.com, Telefono: (+39) 0322 967783, P.Iva IT02422800033.