Huber
TEL. (+39) 0322 967783
MAIL. huber@huberitalia.com

Bidet handshower set HYGENIC SHOWERS_EG007910

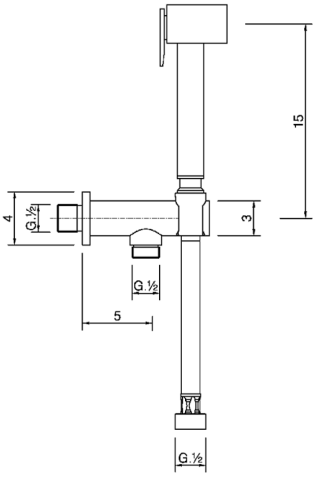

MODEL **EG007910**

Bidet handshower set,wall mounted bracket with safety valve,Bidet handshower,PVC 120 cm.Flexible hose

AVAILABLE FINISHINGS

21 21 Chrome

24 24 Gold

CHARACTERISTICS

Bidet handshower

2026-02-04

© 2021 Huber. Via Brughiere, 50. 28017 - San Maurizio (NO) - Italy
Mail: huber@hubertitalia.com, Telefono: (+39) 0322 967783, P.Iva IT02422800033.