3-function Thermostatic shower set NUOVA KIRUNA_K2C8501D

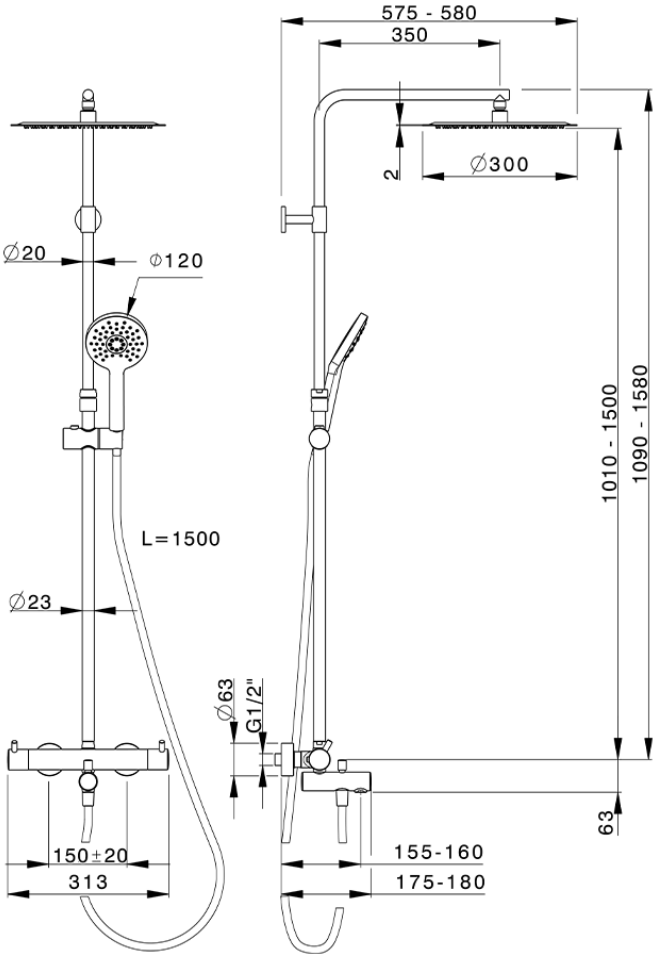

K2C8501D https://en.huberitalia.com/3-function-thermostatic-shower-set-nuova-kiruna-k2c8501d

2026-04-08