Exposed part for Single Lever One Box Valve HARLOCK_HC0BM030

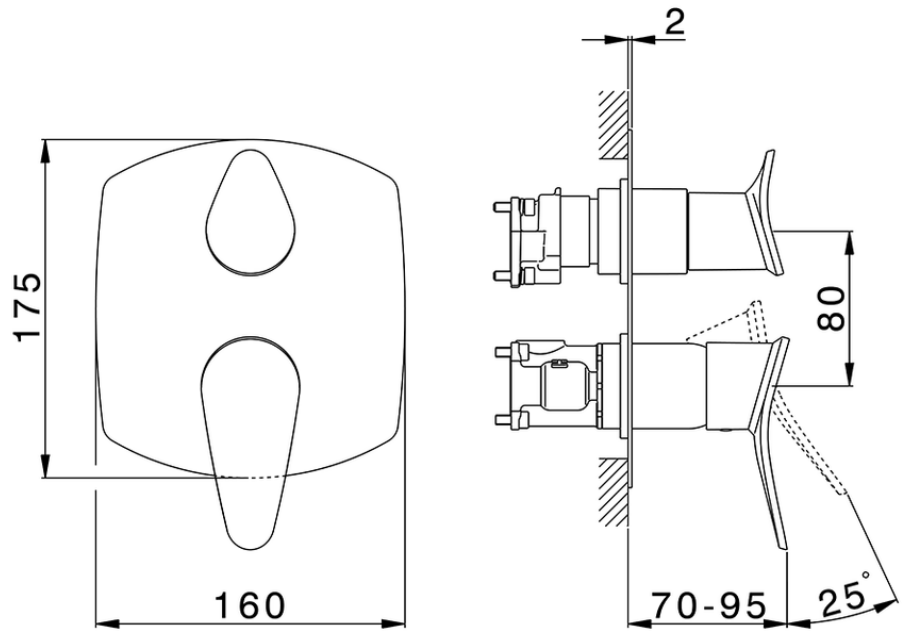

HC0BM030 https://en.huberitalia.com/exposed-part-for-single-lever-one-box-valve-harlock-hc0bm030

© 2021 Huber. Via Brughiere, 50. 28017 - San Maurizio (NO) - Italy
Mail: huber@hubertitalia.com, Telefono: (+39) 0322 967783, P.Iva IT02422800033.

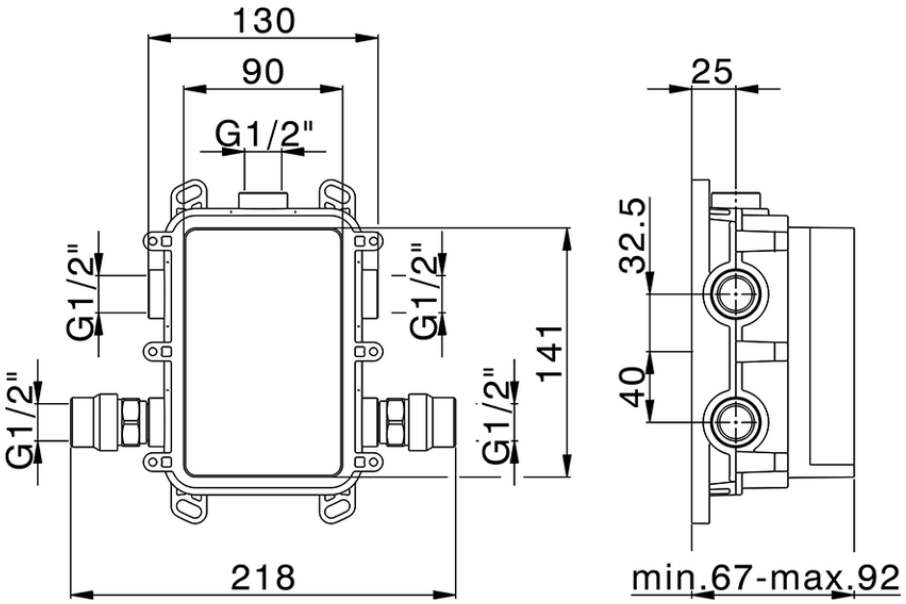

ZB00B031 https://en.huberitalia.com/one-box-universal-concealed-part-one-box-zb00b031

© 2021 Huber. Via Brughiere, 50. 28017 - San Maurizio (NO) - Italy
Mail: huber@hubertitalia.com, Telefono: (+39) 0322 967783, P.Iva IT02422800033.

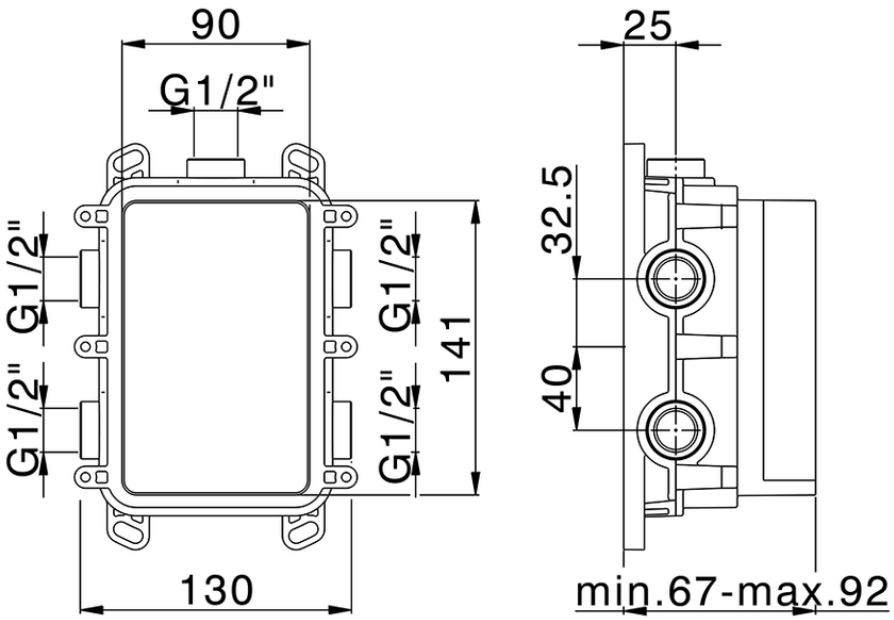

ZB00B030 https://en.huberitalia.com/one-box-universal-concealed-part-one-box-zb00b030

2026-11-23

© 2021 Huber. Via Brughiere, 50. 28017 - San Maurizio (NO) - Italy
Mail: huber@hubertitalia.com, Telefono: (+39) 0322 967783, P.Iva IT02422800033.