Huber
TEL. (+39) 0322 967783
MAIL. huber@huberitalia.com

Exposed part for concealed S.L. shower valve H2

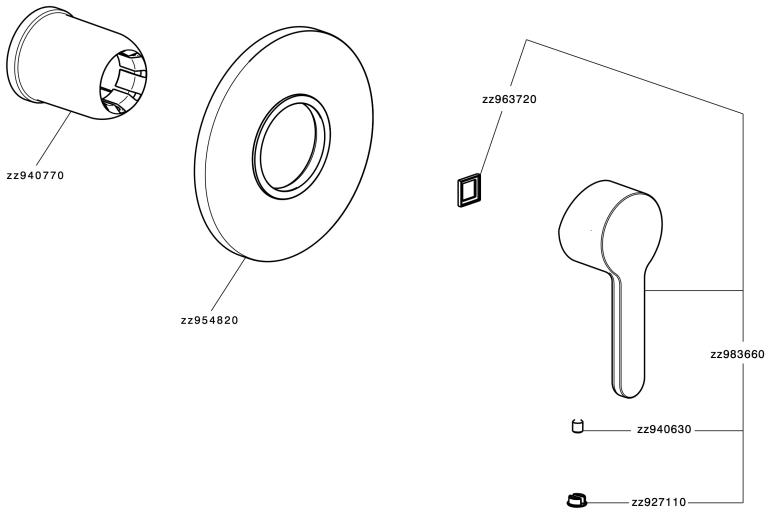

H2003000

https://en.huberitalia.com/exposed-part-for-concealed-s-l-shower-valve-h2h2003000

© 2021 Huber. Via Brughiere, 50. 28017 - San Maurizio (NO) - Italy
Mail: huber@hubertitalia.com, Telefono: (+39) 0322 967783, P.Iva IT02422800033.

Concealed single lever shower valve CONCEALED

ZB005300

https://en.huberitalia.com/concealed-single-lever-shower-valve-concealedzb005300

2024-05-06

© 2021 Huber. Via Brughiere, 50. 28017 - San Maurizio (NO) - Italy
Mail: huber@hubertitalia.com, Telefono: (+39) 0322 967783, P.Iva IT02422800033.