Concealed single lever bath-shower valve CONCEALED_ZB002210

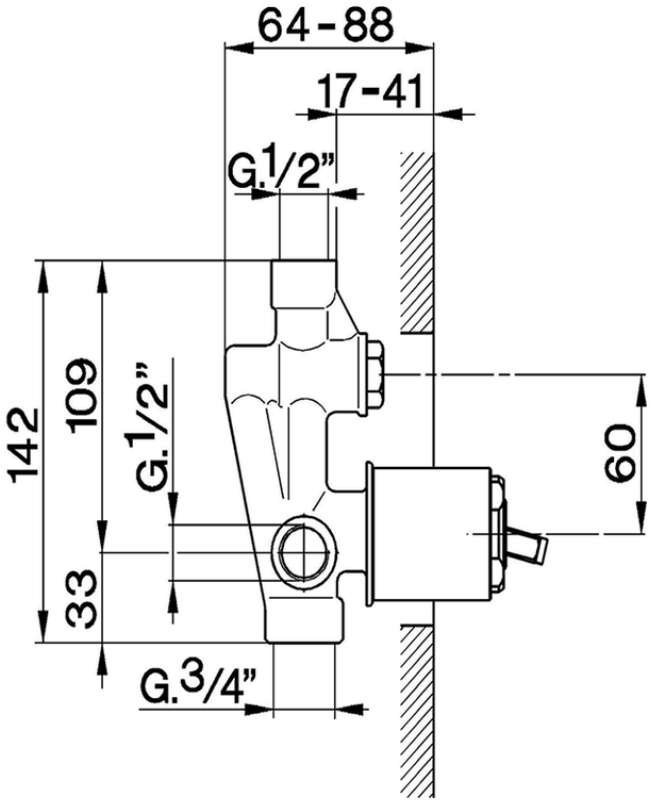

ZB002210 https://en.huberitalia.com/concealed-single-lever-bath-shower-valve-concealed-zb002210

2026-04-06

© 2021 Huber. Via Brughiere, 50. 28017 - San Maurizio (NO) - Italy
Mail: huber@hubertitalia.com, Telefono: (+39) 0322 967783, P.Iva IT02422800033.