3-outlet Concealed thermostatic shower valve CONCEALED_ZB018201

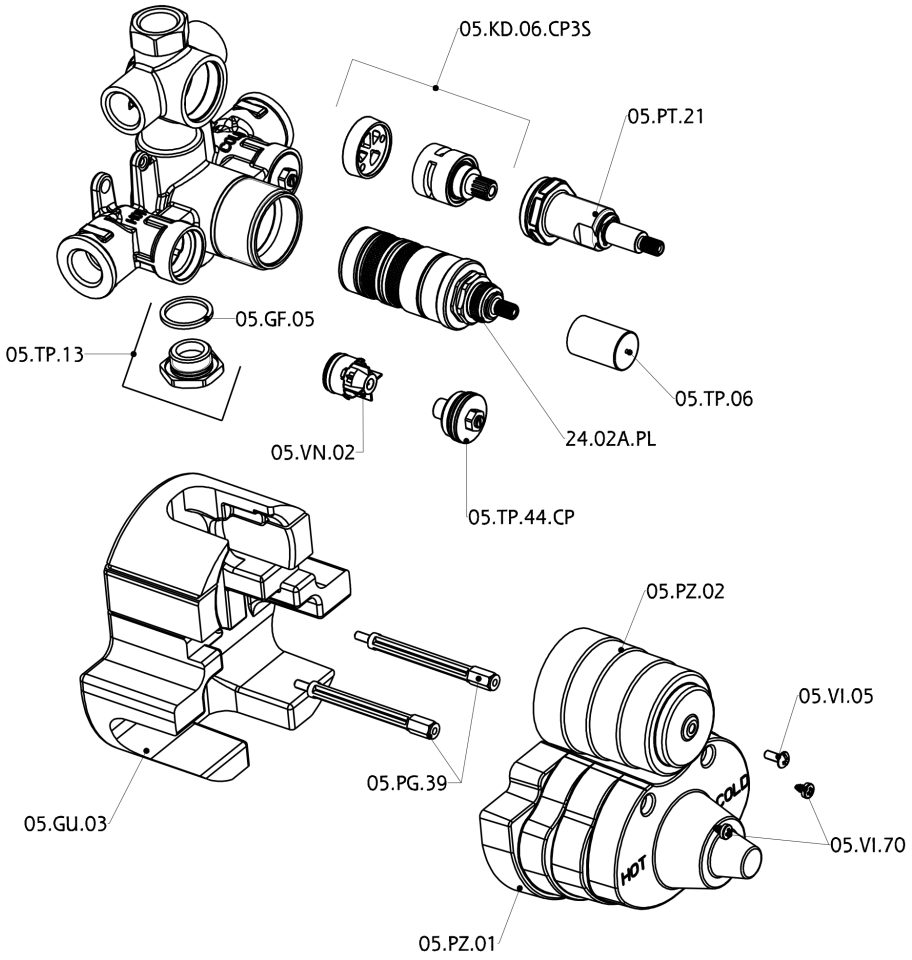

ZB018201 https://en.huberitalia.com/3-outlet-concealed-thermostatic-shower-valve-concealed-zb018201

2026-05-25