Huber
TEL. (+39) 0322 967783
MAIL. huber@huberitalia.com

Exposed part for thermostatic concealed valve PUSH&SHOWER_PS0G1010

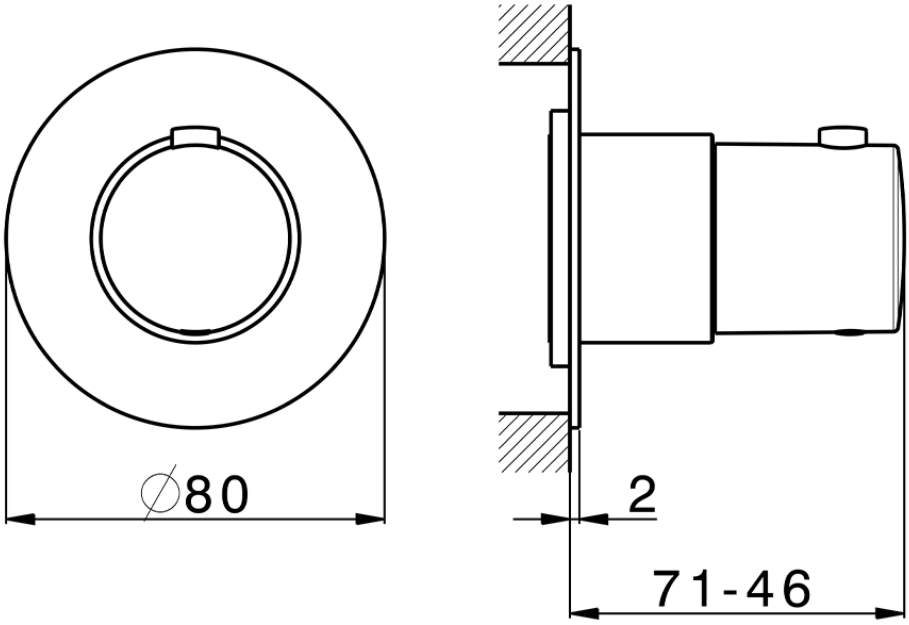

PS0G1010 https://en.huberitalia.com/exposed-part-for-thermostatic-concealed-valve-pushshower-ps0g1010

2026-10-28

© 2021 Huber. Via Brughiere, 50. 28017 - San Maurizio (NO) - Italy
Mail: huber@hubertitalia.com, Telefono: (+39) 0322 967783, P.Iva IT02422800033.