Thermostatic bath mixer VICTORIAN_VTT27010

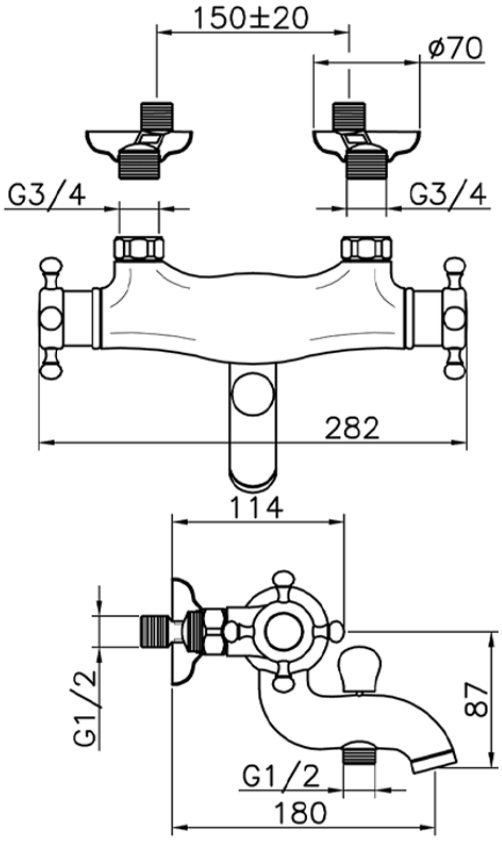

VTT27010

https://en.huberitalia.com/thermostatic-bath-mixer-victorian-vtt27010

2026-06-26