Huber
TEL. (+39) 0322 967783
MAIL. huber@huberitalia.com

Single lever bidet mixer EnergySave CHRONOS_CR002555

MODEL **CR002555**

Single lever bidet mixer EnergySave,swivel spout,with 1"1/4 automatic pop-up waste,G.3/8" stainless steel flexible hose

AVAILABLE FINISHINGS

21 21 Chrome

2F 2F Brushed Nickel

2Q 2Q Black Titanium

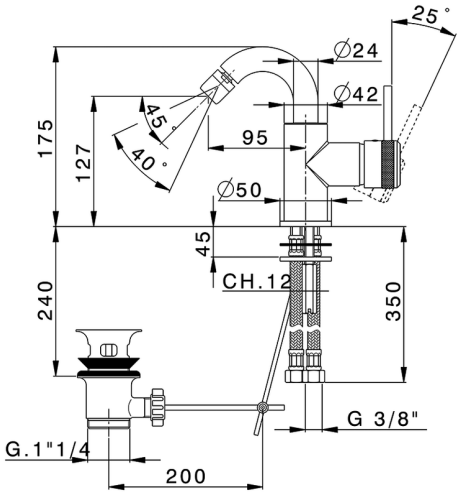

CHARACTERISTICS

Cartridge Spare Parts **ZZ95409000**

35 mm Cartridge

EcoStop

EcoStop feature limits water flow to approximately 50% of maximum output with one point of resistance on setting. Push slightly past the middle stop only when full water output is required. This will save water up to 50%.

EnergySave

Thanks to the EnergySave device, only cold water will be drawn if the lever is operated in the central position, so that the water heater will not be engaged and no hot water wasted, leading to considerable savings in energy and costs. The temperature can be adjusted by rotating the lever to the left, until the desired temperature is reached.

2026-04-09

© 2021 Huber. Via Brughiere, 50. 28017 - San Maurizio (NO) - Italy
Mail: huber@hubertitalia.com, Telefono: (+39) 0322 967783, P.Iva IT02422800033.