Huber
TEL. (+39) 0322 967783
MAIL. huber@huberitalia.com

Single lever washbasin mixer HARLOCK_HK000514



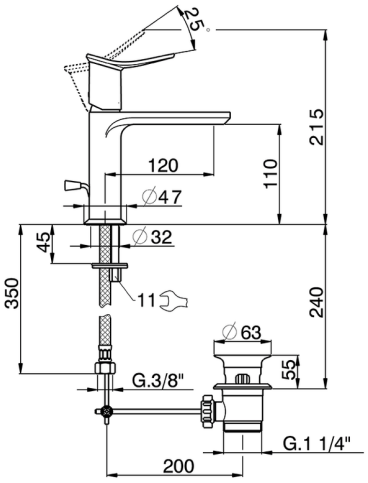

MODEL **HK000514**

Single lever washbasin mixer,with 1"1/4 automatic pop up waste,G.3/8" stainless steel flexible hoses

AVAILABLE FINISHINGS

21	21 Chrome
2P	2P Rose Gold
2Q	2Q Black Titanium
40	40 Matt Black
4Q	4Q Matt White
6T	6T Chrome/Matt Black

CHARACTERISTICS

Cartridge Spare Parts **ZZ96550000**

25 mm Cartridge

© 2021 Huber. Via Brughiere, 50. 28017 - San Maurizio (NO) - Italy
Mail: huber@hubertitalia.com, Telefono: (+39) 0322 967783, P.Iva IT02422800033.

Huber
TEL. (+39) 0322 967783
MAIL. huber@huberitalia.com

Single lever washbasin mixer HARLOCK_HK000514

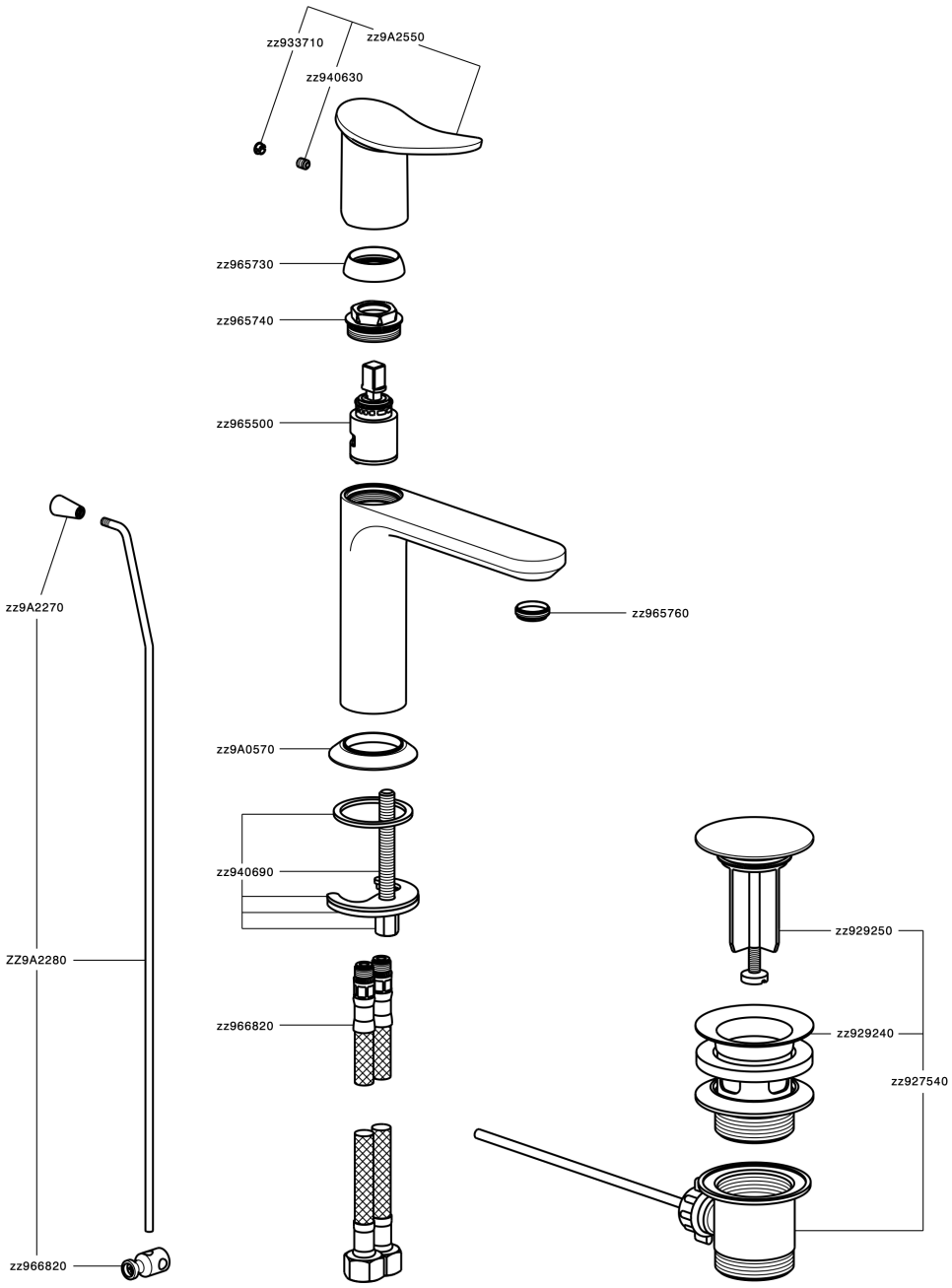

HK000514

https://en.huberitalia.com/single-lever-washbasin-mixer-harlock-hk000514

2026-11-23

© 2021 Huber. Via Brughiere, 50. 28017 - San Maurizio (NO) - Italy
Mail: huber@hubertitalia.com, Telefono: (+39) 0322 967783, P.Iva IT02422800033.