Huber
TEL. (+39) 0322 967783
MAIL. huber@huberitalia.com

Single lever sink mixer with extrac.shower KITCHEN_AT402570

MODEL **AT402570**

Single lever sink mixer with extrac.shower,swivel spout,2 sprays handshower,G.3/8" stainless steel flexible hose

AVAILABLE FINISHINGS

21 21 Chrome

CHARACTERISTICS

Cartridge Spare Parts **ZZ92909000**

43 mm Cartridge

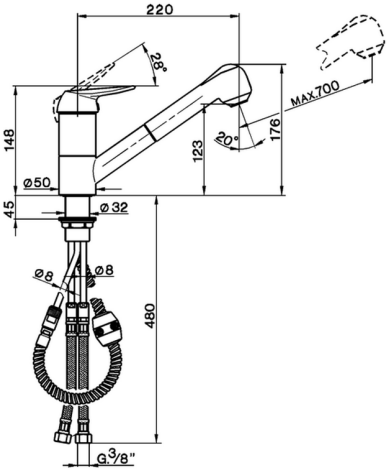

2026-03-03

© 2021 Huber. Via Brughiere, 50. 28017 - San Maurizio (NO) - Italy
Mail: huber@hubertitalia.com, Telefono: (+39) 0322 967783, P.Iva IT02422800033.