Single lever tall washbasin mixer DADO_DD003540

DD 00354 0

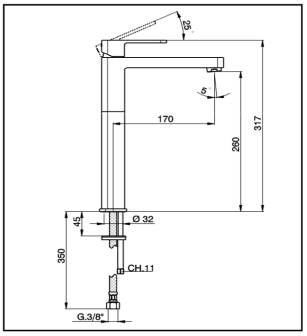

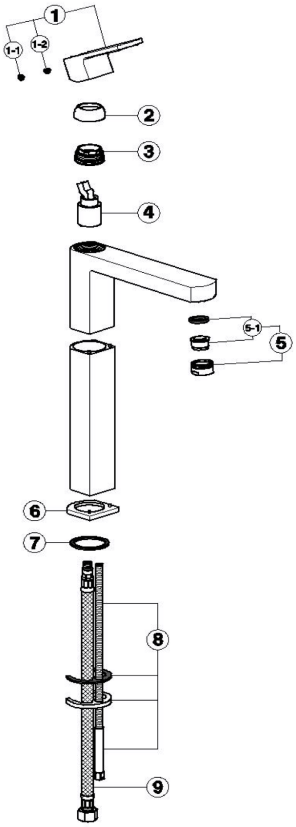

NR	DESCRIZIONE DESCRIPTION DESCRIPTION BESCREIBUNG DESCRIPCIÓN	N.CODICE NR.CODE CODE NO. WERSKNR. N.CÓDIGO
1	Leva monocomando "DD" Levier "DD" Lever "DD" Hebel "DD" Palanca monomando"DD"	ZZ955930
1-1	Placchetta maniglia LS Plaquette cache - vis crois LS Cap for handle LS Abdeckkappe LS Griff Plaquita maneta LS	ZZ933710
1-2	Grano punta coppa inox M.5x6 Vis speciale inox M.5x6 Screw-stainless steel M.5x6 Madenschraube M.5x6 Clavija con punta copa acero inox M.5x6	ZZ940630
2	Copricartuccia monocomando Couvre-cartouche Escutcheon cartridge Abdeckkappe Cubre-cartucho monomando	ZZ955210
3	Calotta bloccaggio cartuccia Ecrou pour cartouche Nut for mixing valve Mutter fuer Kartusche Casquete de fijación cartucho	ZZ955220
4	Cartuccia monocomando Cartouche mitigeurs Mixing valve Kartusche Cartucho monomando	ZZ942400

NR	DESCRIZIONE DESCRIPTION DESCRIPTION BESCREIBUNG DESCRIPCIÓN	N.CODICE NR.CODE CODE NO. WERSKNR. N.CÓDIGO
5	Aeratore M24x1 IA Cascade Mousseur M24x1 IA Cascade Mousseur M24x1 IA Cascade Perlator M24x1 IA Cascade Aireador M24x1 IA Cascade	ZZ944150
5-1	Cartuccia per aeratore M.24x1 Cascade Cartouche pour mousseur M.24x1 Cascade Mousseur cartridge M.24x1 Cascade Kartusche fuer Perlator M.24x1 Cascade Cartucho para aireador M.24x1 Cascade	ZZ933990
6	Basetta monocomando "DD" Bague "DD" Assembling ring "DD" Basis "DD" Base monomando lavabo "DD"	ZZ955230
7	Guarnizione 42x35x2 Joint 42x35x2 Gasket 42x35x2 Dichtung 42x35x2 Junta 42x35x2	ZZ955240
8	Set installazione Set installation Installation set single lever Befestigungsset Juego de instalación monomando	ZZ954250
9	Flex M. 10x1 3/8" F L.610 Flex M. 10x1 3/8" F L.610 Flex M. 10x1 3/8" F L.610 Anschlussschlauc M.10x1 3/8" F L.610 Flexo M. 10x1 3/8" H L.610	ZZ955250

NR	DESCRIZIONE DESCRIPTION DESCRIPTION BESCREIBUNG DESCRIPCIÓN	N.CODICE NR.CODE CODE NO. WERSKNR. N.CÓDIGO

DD003540 https://en.huberitalia.com/single-lever-tall-washbasin-mixer-dado-dd003540

2026-04-06

© 2021 Huber. Via Brughiere, 50. 28017 - San Maurizio (NO) - Italy
Mail: huber@hubertitalia.com, Telefono: (+39) 0322 967783, P.Iva IT02422800033.