Concealed thermostatic shower mixer CROISETTE_910.CS01H.

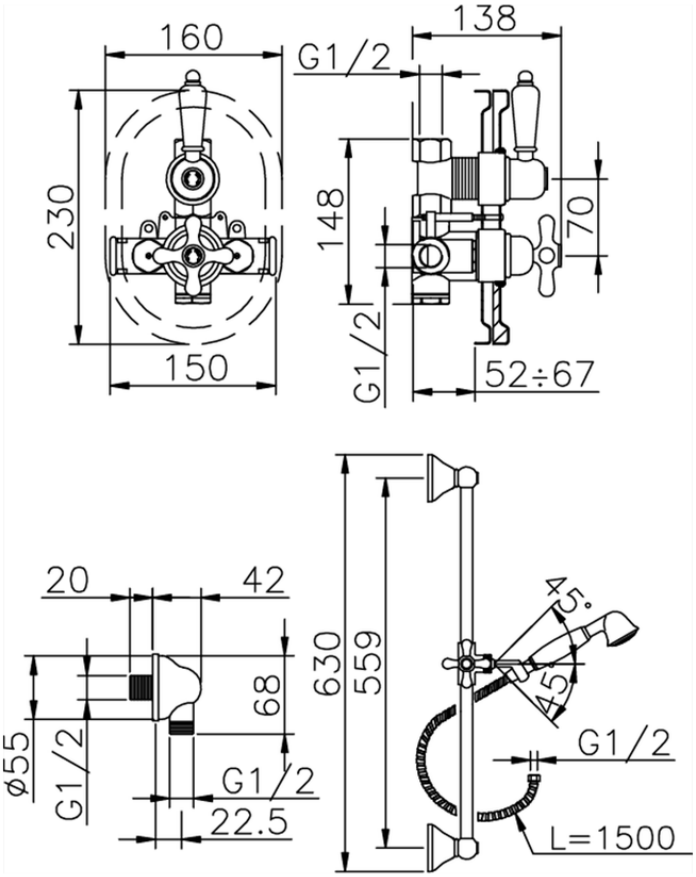

910.CS01H. https://en.huberitalia.com/concealed-thermostatic-shower-mixer-croisette-910-cs01h

2026-04-10