Huber
TEL. (+39) 0322 967783
MAIL. huber@huberitalia.com

Single lever bidet mixer NUOVA EGO_NE000554

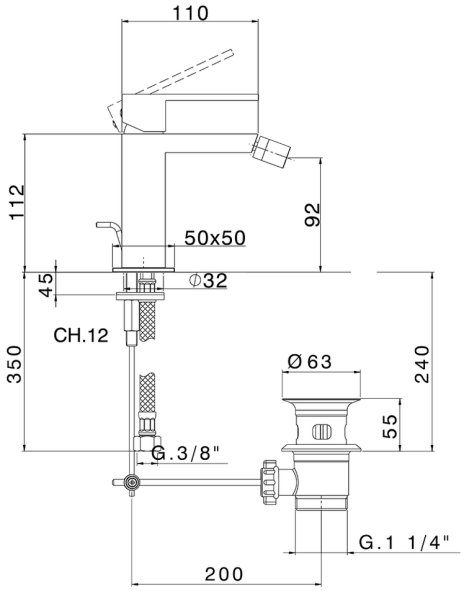

MODEL **NE000554**

Single lever bidet mixer,with 1"1/4 automatic pop-up waste,G.3/8" stainless steel flexible hoses

AVAILABLE FINISHINGS

21 21 Chrome

2F 2F Brushed Nickel

40 40 Matt Black

4Q 4Q Matt White

CHARACTERISTICS

Cartridge Spare Parts **ZZ96550000**

25 mm Cartridge

2026-04-06

© 2021 Huber. Via Brughiere, 50. 28017 - San Maurizio (NO) - Italy
Mail: huber@hubertitalia.com, Telefono: (+39) 0322 967783, P.Iva IT02422800033.