Huber
TEL. (+39) 0322 967783
MAIL. huber@huberitalia.com

Exposed part for single lever washbasin valve LEVITY_LY005511

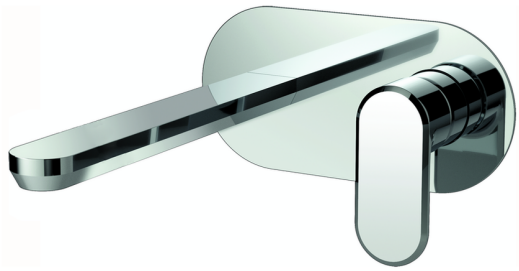

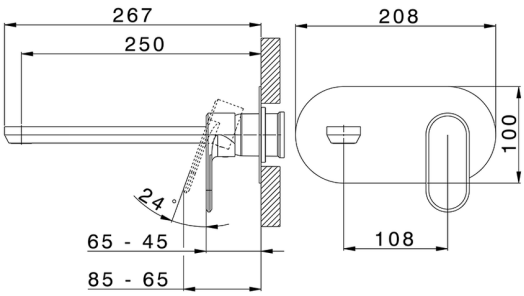

MODEL **LY005511**

Exposed part for single lever washbasin valve,without concealed part,spout L.250 mm,for item Easy-Box ZB002450 and art.ZB025510

AVAILABLE FINISHINGS

21 21 Chrome

2B 2B Polished Nickel

2F 2F Brushed Nickel

40 40 Matt Black

4Q 4Q Matt White

CHARACTERISTICS

Installation	**Concealed**
Required concealed parts	**ZB002450**

© 2021 Huber. Via Brughiere, 50. 28017 - San Maurizio (NO) - Italy
Mail: huber@hubertitalia.com, Telefono: (+39) 0322 967783, P.Iva IT02422800033.

Huber
TEL. (+39) 0322 967783
MAIL. huber@huberitalia.com

Exposed part for single lever washbasin valve LEVITY_LY005511

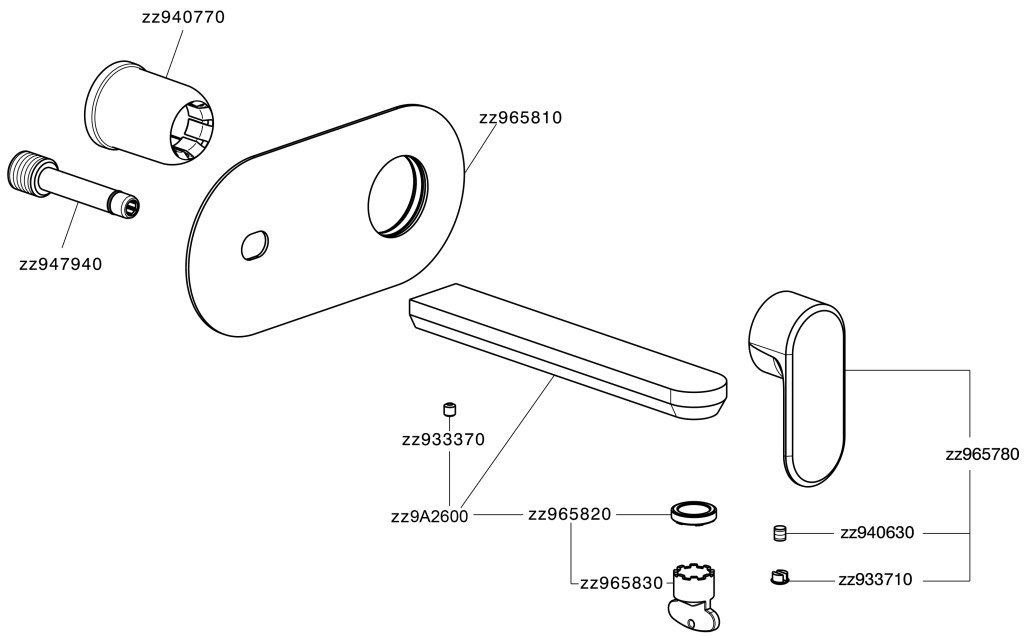

LY005511 https://en.huberitalia.com/exposed-part-for-single-lever-washbasin-valve-levity-ly005511

© 2021 Huber. Via Brughiere, 50. 28017 - San Maurizio (NO) - Italy
Mail: huber@hubertitalia.com, Telefono: (+39) 0322 967783, P.Iva IT02422800033.

Huber
TEL. (+39) 0322 967783
MAIL. huber@huberitalia.com

Concealed single lever washbasin mixer Easy-Box CONCEALED_ZB002450

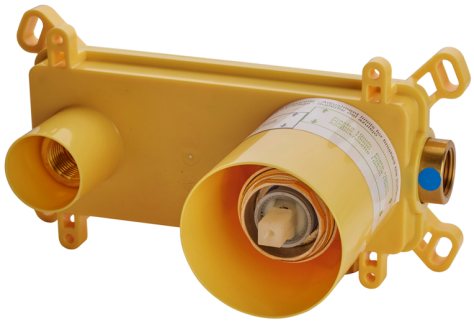

MODEL **ZB002450**

Concealed single lever washbasin mixer
Easy-Box,with protection guard box,without trim kit

AVAILABLE FINISHINGS

04 04 Without finishing

CHARACTERISTICS

Installation	**Concealed**
Cartridge Spare Parts	**ZZ95409000**
35 mm Cartridge	
Concealed	**1**

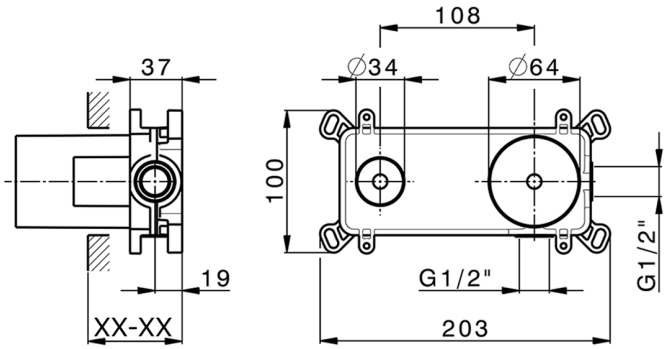

Piastra/Plate/Plaque/Platte/Placa
2-3mm: XX 56-76
10mm: XX 48-68

DeviaStop

The Huber Devia Stop technology allows to adjust the water flow and to direct it to the selected output point (overhead soaker, hand shower, etc).

2025-12-06

© 2021 Huber. Via Brughiere, 50. 28017 - San Maurizio (NO) - Italy
Mail: huber@hubertitalia.com, Telefono: (+39) 0322 967783, P.Iva IT02422800033.