Huber
TEL. (+39) 0322 967783
MAIL. huber@huberitalia.com

Single hook BATHROOM ACCESSORIES_SQ090710

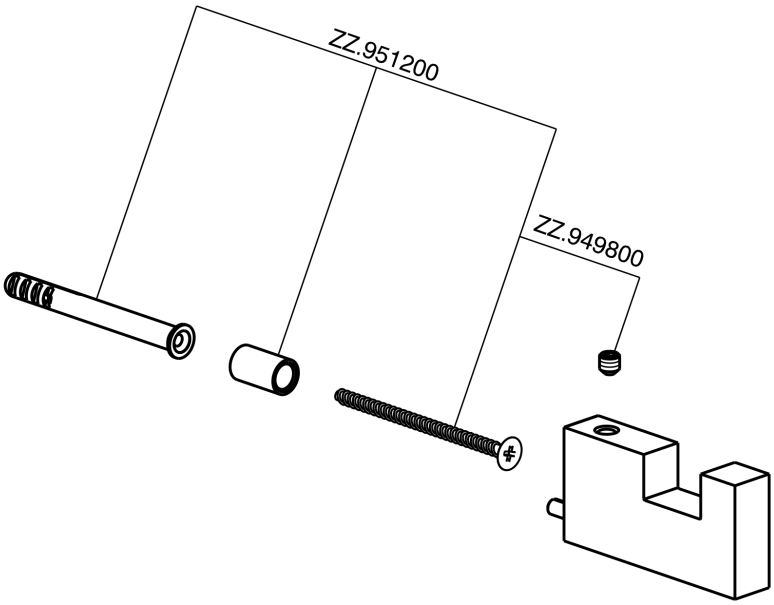

SQ090710

https://en.huberitalia.com/single-hook-bathroom-accessories-sq090710

2026-06-10

© 2021 Huber. Via Brughiere, 50. 28017 - San Maurizio (NO) - Italy
Mail: huber@hubertitalia.com, Telefono: (+39) 0322 967783, P.Iva IT02422800033.