Huber
TEL. (+39) 0322 967783
MAIL. huber@huberitalia.com

Washbasin mixer CROISETTE_CS000520

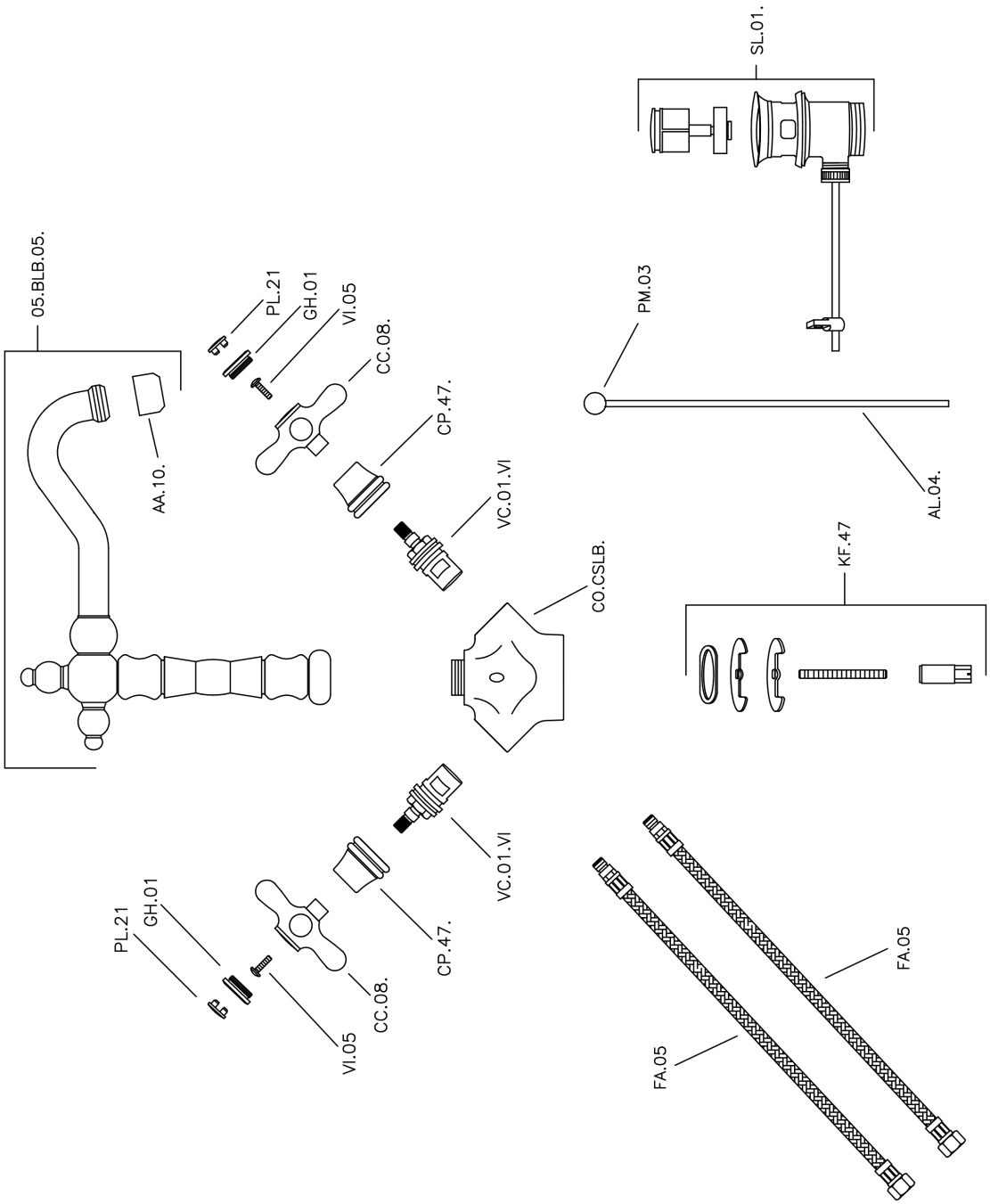

CS000520

https://en.huberitalia.com/washbasin-mixer-croisette-cs000520

2026-06-14

© 2021 Huber. Via Brughiere, 50. 28017 - San Maurizio (NO) - Italy
Mail: huber@hubertitalia.com, Telefono: (+39) 0322 967783, P.Iva IT02422800033.