Victorian showerset SHOWER_62.03H.

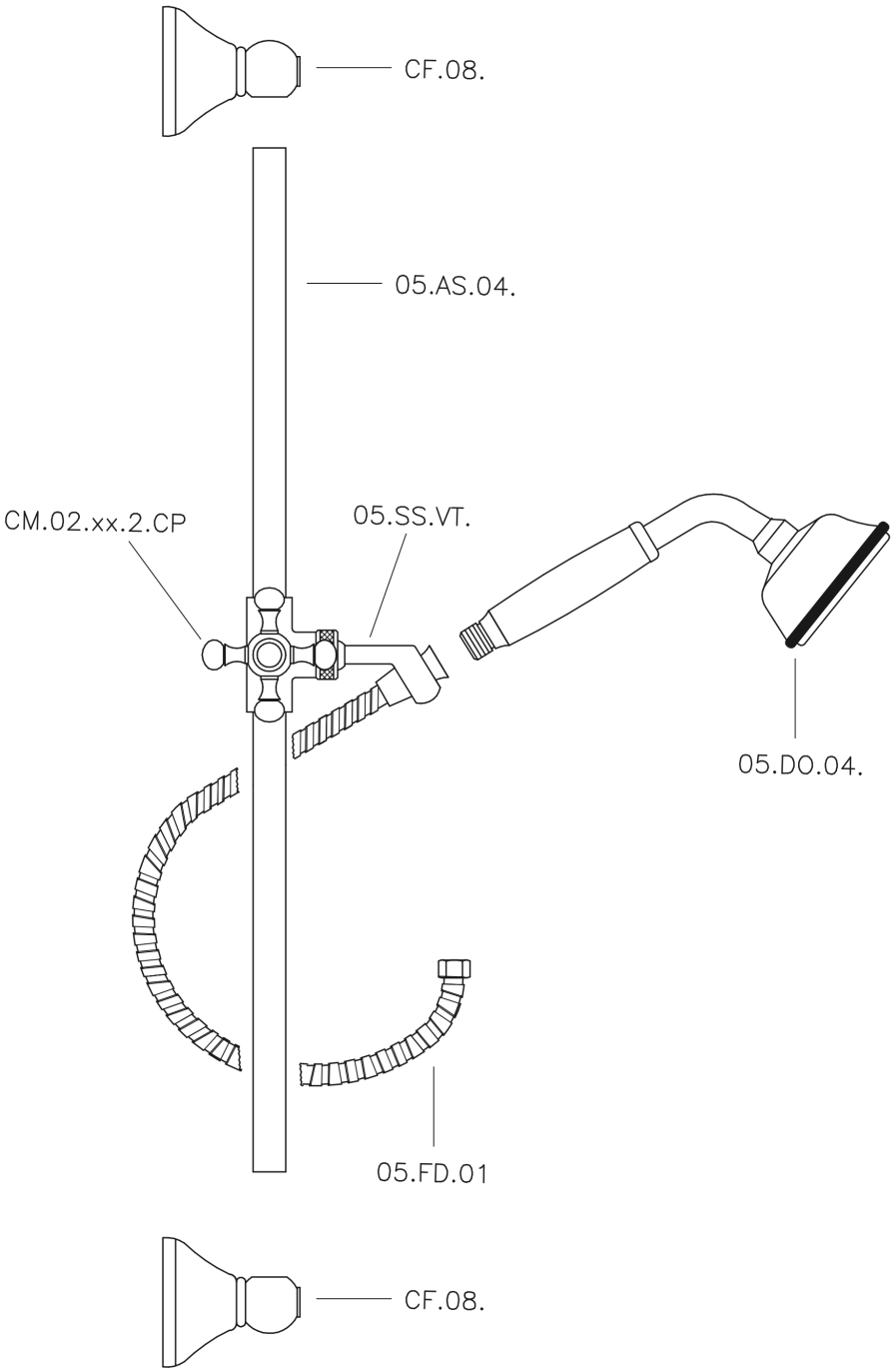

62.03H.

https://en.huberitalia.com/victorian-showerset-shower-62-03h

2026-03-16

© 2021 Huber. Via Brughiere, 50. 28017 - San Maurizio (NO) - Italy
Mail: huber@hubertitalia.com, Telefono: (+39) 0322 967783, P.Iva IT02422800033.