PURE Single Lever Sink Mixer KITCHEN_TV000985

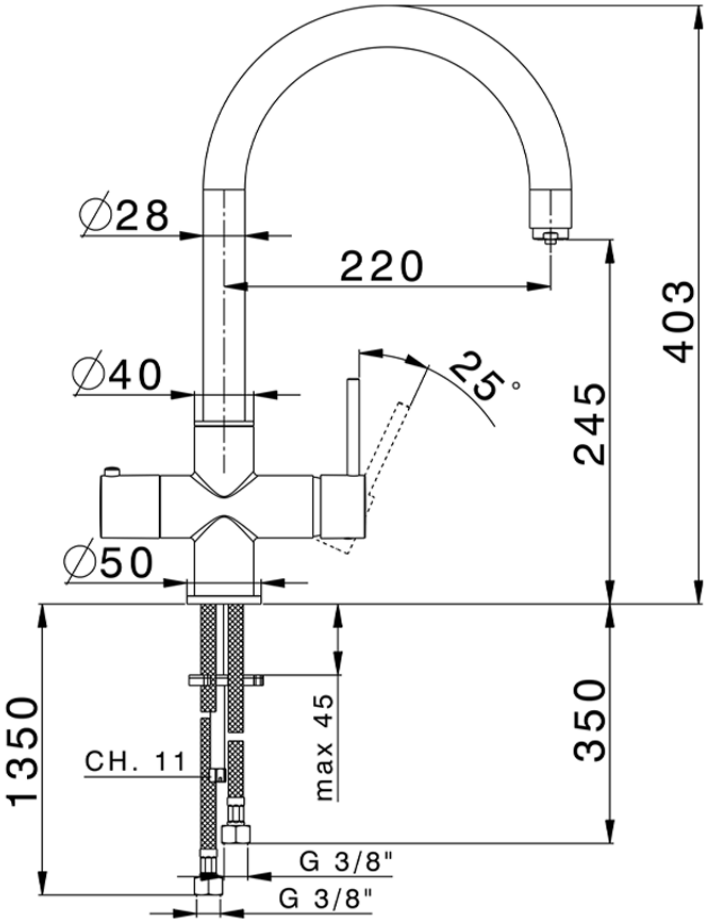

TV000985

https://en.huberitalia.com/pure-single-lever-sink-mixer-kitchen-tv000985

2026-06-06

© 2021 Huber. Via Brughiere, 50. 28017 - San Maurizio (NO) - Italy
Mail: huber@hubertitalia.com, Telefono: (+39) 0322 967783, P.Iva IT02422800033.