Single lever washbasin mixer CHRONOS_CR001540

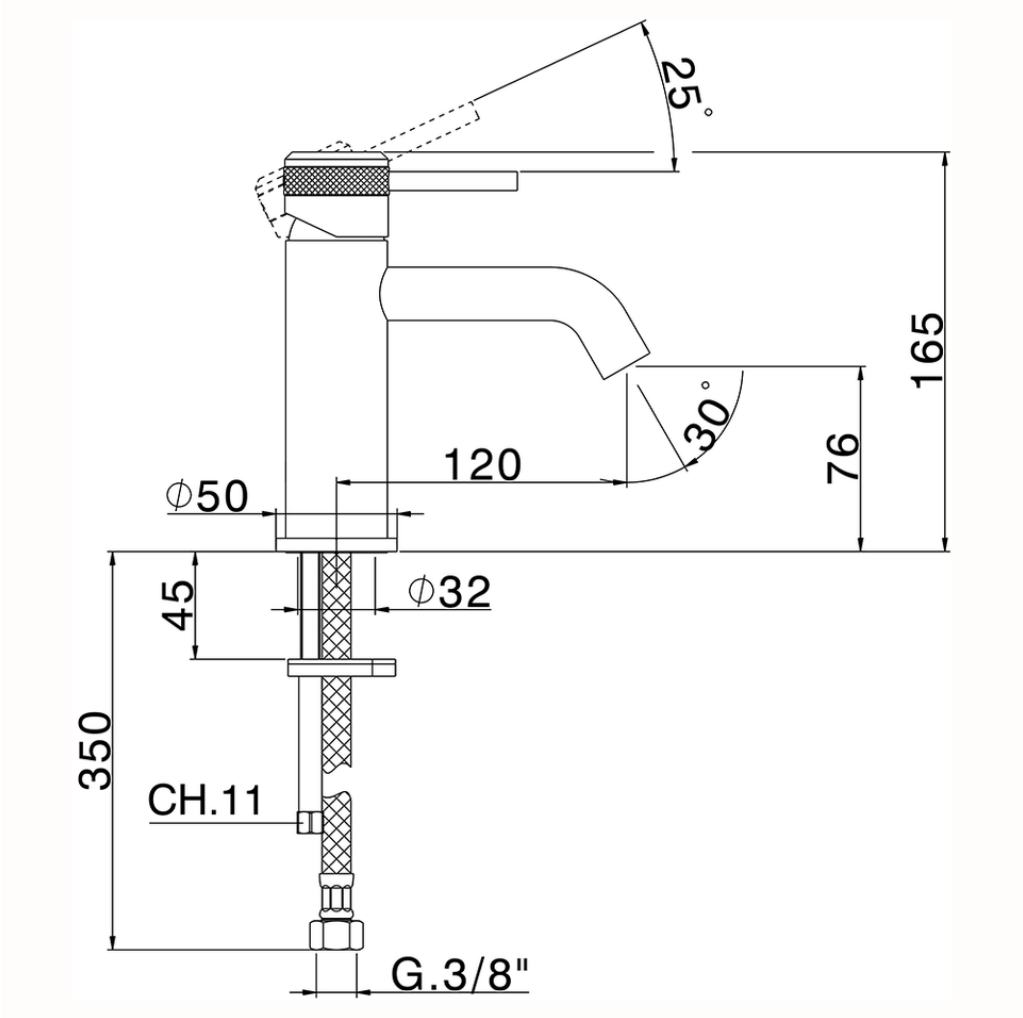

CR001540

https://en.huberitalia.com/single-lever-washbasin-mixer-chronos-cr001540

2026-05-25

© 2021 Huber. Via Brughiere, 50. 28017 - San Maurizio (NO) - Italy
Mail: huber@hubertitalia.com, Telefono: (+39) 0322 967783, P.Iva IT02422800033.