Concealed stop valve CROISETTE_CS000313

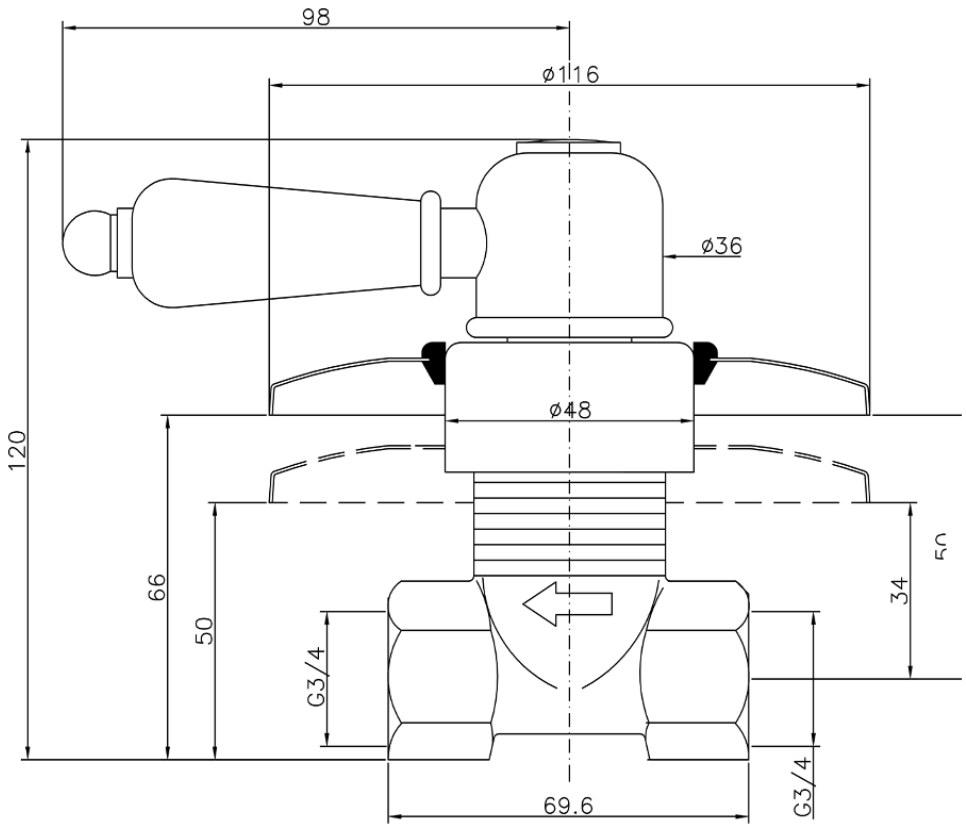

CS000313

https://en.huberitalia.com/concealed-stop-valve-croisette-cs000313

2026-06-08

© 2021 Huber. Via Brughiere, 50. 28017 - San Maurizio (NO) - Italy
Mail: huber@hubertitalia.com, Telefono: (+39) 0322 967783, P.Iva IT02422800033.