Concealed thermostatic bath mixer CROISETTE_914.CS01H.

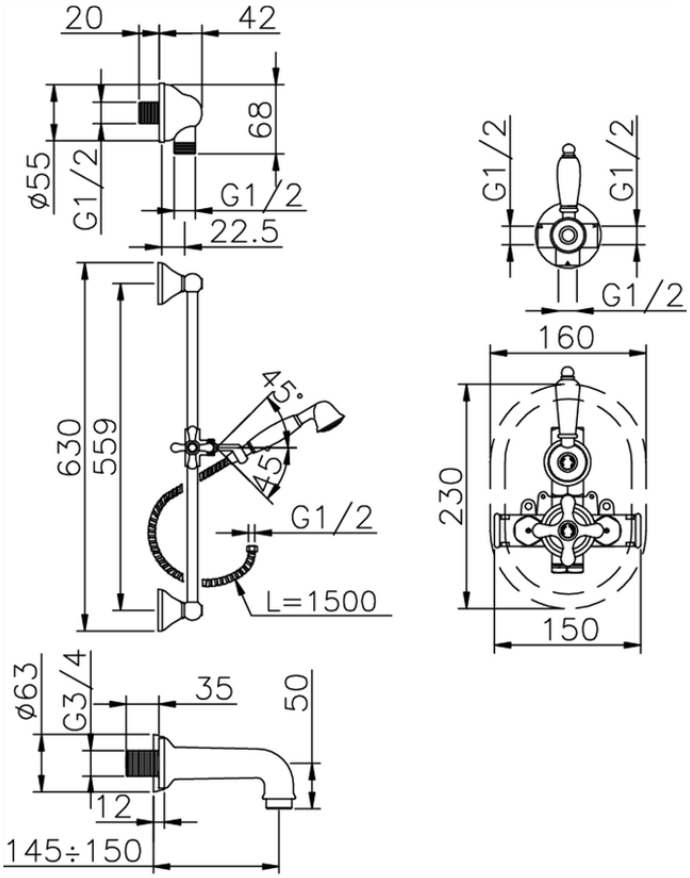

914.CS01H. https://en.huberitalia.com/concealed-thermostatic-bath-mixer-croisette-914-cs01h

2026-06-09