Concealed thermostatic bath mixer CROISETTE_914.CS01H.

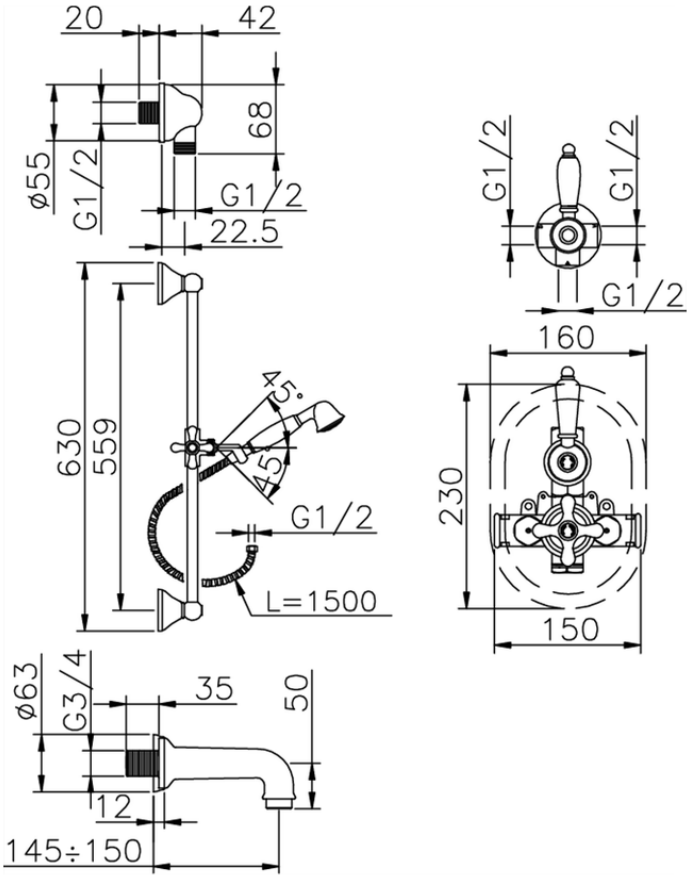

914.CS01H. https://en.huberitalia.com/concealed-thermostatic-bath-mixer-croisette-914-cs01h

2026-04-06

© 2021 Huber. Via Brughiere, 50. 28017 - San Maurizio (NO) - Italy
Mail: huber@hubertitalia.com, Telefono: (+39) 0322 967783, P.Iva IT02422800033.