Thermostatic washbasin mixer CROISETTE_CST52010

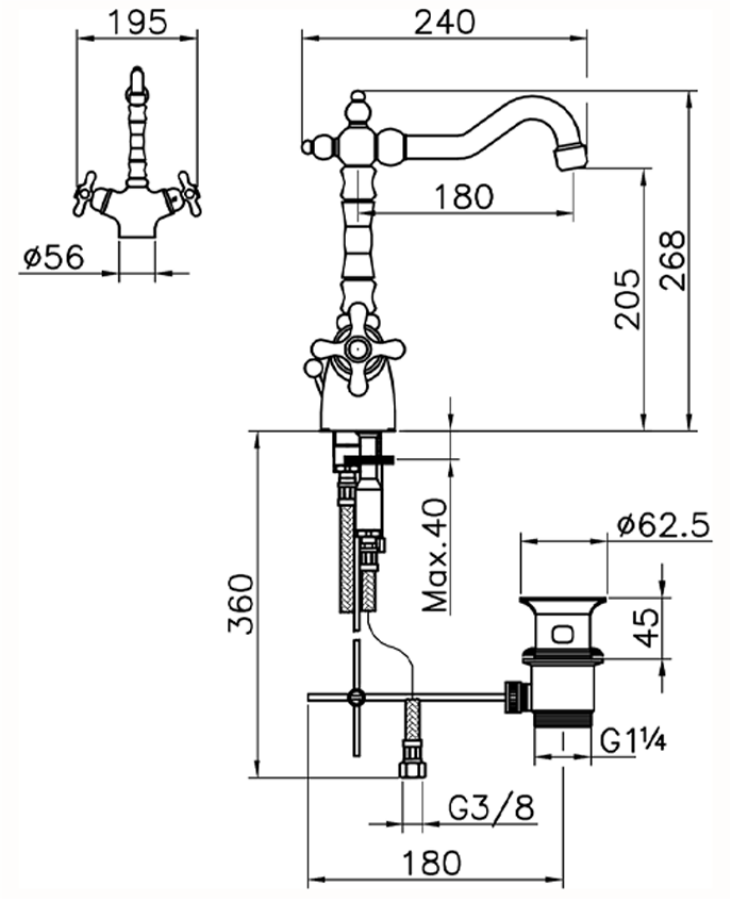

CST52010

https://en.huberitalia.com/thermostatic-washbasin-mixer-croisette-cst52010

2025-04-26

© 2021 Huber. Via Brughiere, 50. 28017 - San Maurizio (NO) - Italy
Mail: huber@hubertitalia.com, Telefono: (+39) 0322 967783, P.Iva IT02422800033.